# 심사결과 통지서

| | | | | |
|---|---|---|---|---|
| 신청인 | 사업장명 | 극동호이스트(주) | 사업장관리번호 | 134-81-013350 |
| | 사업자등록번호 | 134-81-01335 | 대표자 성명 | 최성찬 |
| | 소재지 | (154 - 23) 경기도 안산시 단원구 해봉로 119, 607B, 4L(성곡동630-2) | | |

| | | | |
|---|---|---|---|
| 안전인증대상 기계·기구명 | 호이스트[동일형식인정 - "별첨"] | | |
| 형 식 (규 격) | KDV5-M | 용 량 (등 급) | 5 Ton |

**산업안전보건법 제 84조 및 같은 법 시행규칙 제110조에 따라 실시한**

] 예비심사
V ] 서면심사
] 기술능력 및 생산체계 심사
] 개별 제품심사
] 개별 제품심사(제작중)
] 형식별 제품심사

**결과가** [ V ] **적 합** / [ ] **부적합** **함을 통지합니다.**

**2021년 02월 04일**

**인증심사원** **이남진 진주호 여정현** (서명 또는 인)

## 한국산업안전보건공단 이사장

제2021 - 2153909 호

# 안 전 인 증 서

( 사업장명 ) 극동호이스트(주)

( 소 재 지 ) (15423)경기도 안산시 단원구 해봉로 119(성곡동630-2)

위 사업장에서 제조하는 아래의 품목이 산업안전보건법 제84조 및 시행규칙 제110조제1항에 따른 안전인증 심사 결과 안전·보건기준에 적합하므로 안전인증표시의 사용을 인증합니다.

품 목

호이스트 (국내품)

형식,모델(용량,등급)/인증번호

KDV5-M (5Ton) / 21-AH2AC-00001

인 증 기 준

고용노동부 고시 제2020 - 41호 ( 위험기계·기구 안전인증 고시 )

인 증 조 건

(15423)경기도 안산시 단원구 해봉로 119(성곡동630-2)에서 생산된 동일 형식 제품에 한함

2021년 02월 22일

한국산업안전보건공단 이사장

불법복제 및 배포금지

# 서 면 심 사 서 류

## 형식 번호 : KDV5-M


## 극 동 호 이 스 트 ㈜

工場 : 경기도 안산시 단원구 해봉로 119 (성곡동)

電話 : 031) 491 - 5311

FAX : 031) 492 - 0473


192.168.11.51 / 2021-02-05 15:49:22

# 동 일 형 식 일 람 표

| 사업장명 | 극동호이스트㈜ | 개정일자 및 번호 | | 인증번호 | | |
|---|---|---|---|---|---|---|
| 형식 및 모델 | | 동일 형식 인정범위 및 내역 | | | | 비 고 |
| 형식 | 모델 | 권상속도(m/min) | 횡행속도(m/min) | 양정(m) | 횡행방식 | |
| **KDV5-M** | KDV5-L6-M | 고속 (5.5kw x 6P)<br>1단 : 5.6m/min<br>2단 : 0.56~5.6m/min<br><br>저속 (4.2kw x 8P)<br>1단 : 4.2m/min<br>2단 : 0.42~4.2m/min | 고속 (0.75kw x 4P)<br>1단 : 24m/min<br>2단 : 2~24m/min<br><br>저속 (0.5kw x 8P)<br>1단 : 16m/min<br>2단 : 2~16m/min | 6 | 모터구동식 | 권상, 횡행<br>INVERTER<br>CONTROL |
| | KDV5-L9-M | | | 9 | | |
| | KDV5-L12-M | | | 12 | | |
| | KDV5-L18-M | | | 18 | | |
| | KDV5-L24-M | | | 24 | | |
| | KDV5-L30-M | | | 30 | | |

불법복제 및 배포금지

192.168.11.51 / 2021-02-05 15:49:22

불법복제 및 배포금지

제 2012-BJ-0009 호

# 안 전 인 증 서

정호엔지니어링

경기도 광명시 노동사동 440-5

위 사업장에서 제조하는 아래의 품목이 산업안전보건법 제34조 및 같은 법 시행규칙 제58조의4제4항에 따른 안전인증 심사 결과 안전 · 보건기준에 적합하므로 안전인증표시의 사용을 인증합니다.

**품 목**

양중기용 과부하방지장치

**형식 · 모델/용량 · 등급/인증번호**

| 형식·모델 | 용량·등급 | 인증번호 |
|---|---|---|
| JDL-100 | J-2 | 12-AV2BJ-0009 |

**인 증 기 준**

방호장치 의무안전인증 고시(고용노동부고시 제2010-36호)

**인 증 조 건**

아래 주소에서 생산되는 제품에 한함.

정호엔지니어링, 경기도 광명시 노동사동 440-5

2012년 06월 11일

**한국산업안전보건공단 이사장**

192.168.11.51 / 2021-02-05 15:49:22

| | |
|---|---|
| 형식번호 | KDV5-M |
| 모 델 명 | KDV5-L6-M |

| NO | DESCRIPTION | MATERIAL | Q'TY | SIZE | REMARK |
|---|---|---|---|---|---|
| 1 | LOAD LIMITER | | 1 | | |
| 2 | EMERGENCY S/W | | 1 | | |
| 3 | SAFETY LATCH | SPC | 1 | | |
| 4 | UPPER LIMIT S/W | SS275 | 1 | | |
| 5 | I-BEAM | SS275 | | TABLE 참조 | |

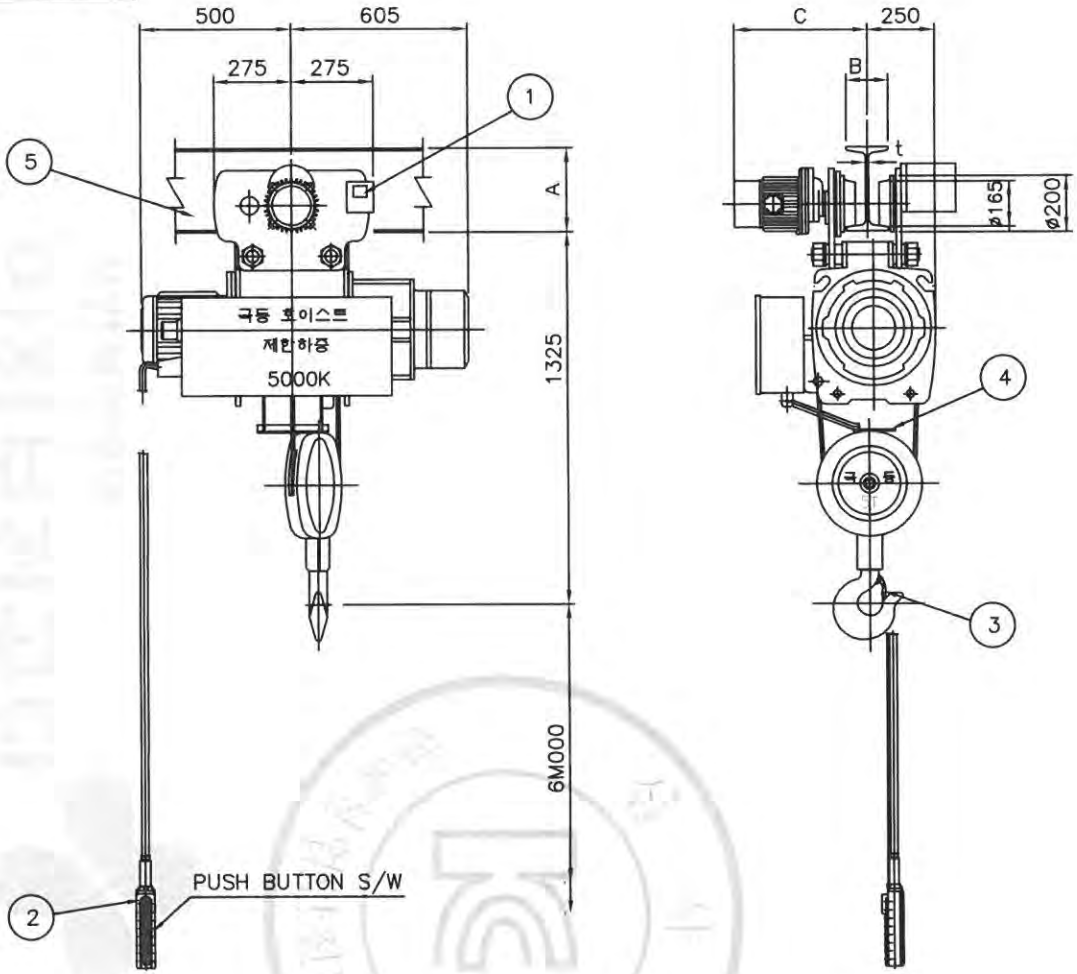


| SPECIFICATION | | | |
|---|---|---|---|
| RATED LOAD | | | 5000 KG |
| TESTING LOAD | | | 6250 KG |
| LIFT | | | 6 M |
| RATING | | | 30 MIN |
| HOISTING (inverter control) | HIGH | SPEED | 5.6 M/MIN (single speed)<br>0.56~5.6 M/MIN (double speed) |
| | | MOTOR | 5.5 KW x 6 P |
| | LOW | SPEED | 4.2 M/MIN (single speed)<br>0.42~4.2 M/MIN (double speed) |
| | | MOTOR | 4.2 KW x 8 P |
| TRAVERSING (inverter control) | HIGH | SPEED | 24 M/MIN (single speed)<br>2~24 M/MIN (double speed) |
| | | MOTOR | 0.75 KW x 4 P |
| | LOW | SPEED | 16 M/MIN (single speed)<br>2~16 M/MIN (double speed) |
| | | MOTOR | 0.5 KW x 6 P |
| WIRE ROPE | | | (6x37) ø16 x 2 FALLS |
| POWER SOURCE | | | AC3ø 220V(380,440,460,480)V 60Hz |
| COLOR | | | 10 B 3/5 |
| WEIGHT | | | 577 KG |

| TRAVERSING I - BEAM A x B x t | Ix (Cm⁴) | Zx (Cm³) | SUPPORT LENGTH | C |
|---|---|---|---|---|
| I-300 x 150 x 10 | 12700 | 849 | MAX. 4.5M | 465 |
| I-350 x 150 x 12 | 22400 | 1280 | MAX. 6.1M | 465 |
| I-400 x 150 x 10 | 24100 | 1200 | MAX. 5.7M | 465 |
| I-450 x 175 x 11 | 39200 | 1740 | MAX. 7.8M | 480 |

| REV | DATE | DESCRIPTION | DRAWN | CHECK | APPRVD |
|---|---|---|---|---|---|
| A | 20.JAN.2021 | REDRAWING | K.H.Han | - | - |

| SCALE | SHT. NO. | REV. | TITLE |
|---|---|---|---|
| 1:1 | - | - | ARRANGEMENT DRAWING KDV5-L6-M |

극동호이스트 주식회사 KUKDONG HOIST CO., LTD.

DWG. NO. KDV5M-6000

불법복제 및 배포금지
192.168.11.51 / 2021-02-05 15:49:22

| | |
|---|---|
| 형식번호 | KDV5-M |
| 모 델 명 | KDV5-L9-M |

| NO | DESCRIPTION | MATERIAL | Q'TY | SIZE | REMARK |
|---|---|---|---|---|---|
| 1 | LOAD LIMITER | | 1 | | |
| 2 | EMERGENCY S/W | | 1 | | |
| 3 | SAFETY LATCH | SPC | 1 | | |
| 4 | UPPER LIMIT S/W | SS275 | 1 | | |
| 5 | I-BEAM | SS275 | | TABLE 참조 | |

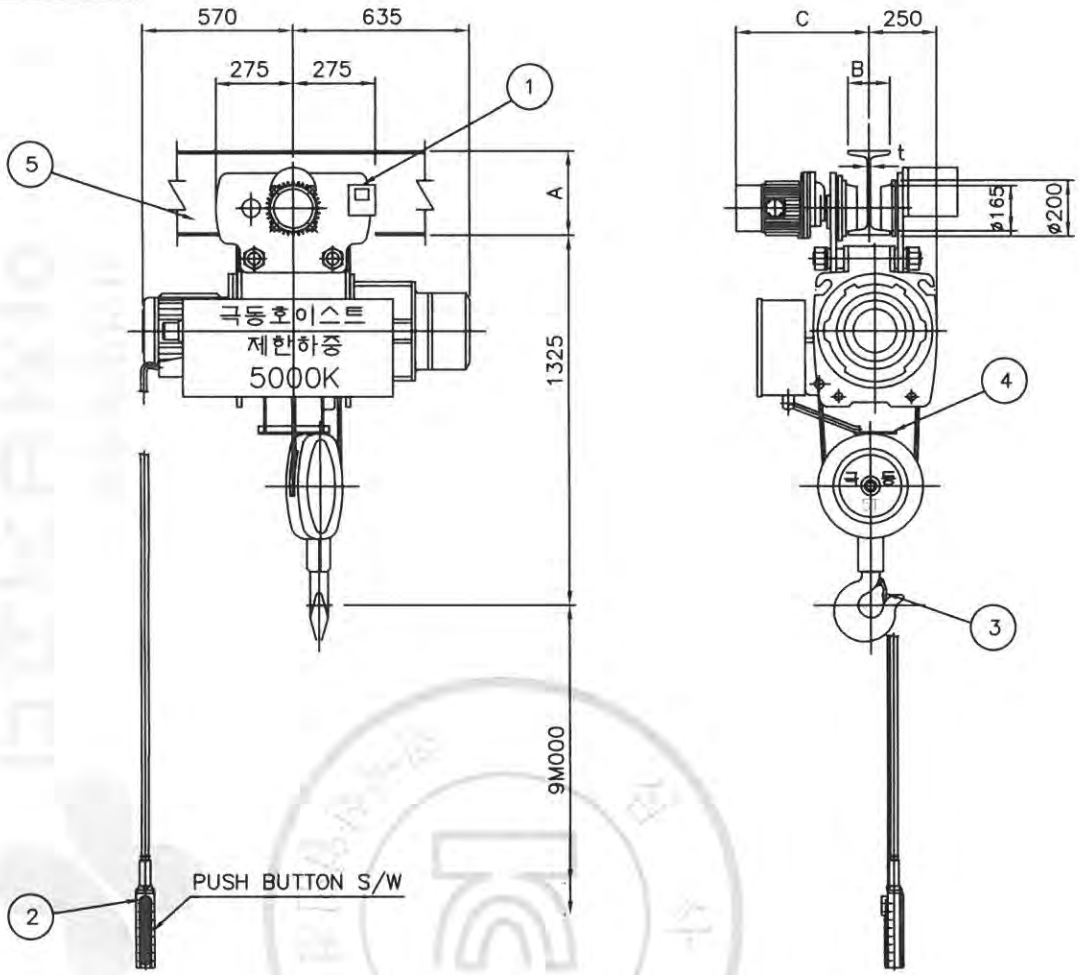


| SPECIFICATION | | | |
|---|---|---|---|
| RATED LOAD | | | 5000 KG |
| TESTING LOAD | | | 6250 KG |
| LIFT | | | 9 M |
| RATING | | | 30 MIN |
| HOISTING (inverter control) | HIGH | SPEED | 5.6 M/MIN (single speed)<br>0.56~5.6 M/MIN (double speed) |
| | | MOTOR | 5.5 KW x 6 P |
| | LOW | SPEED | 4.2 M/MIN (single speed)<br>0.42~4.2 M/MIN (double speed) |
| | | MOTOR | 4.2 KW x 8 P |
| TRAVERSING (inverter control) | HIGH | SPEED | 24 M/MIN (single speed)<br>2~24 M/MIN (double speed) |
| | | MOTOR | 0.75 KW x 4 P |
| | LOW | SPEED | 16 M/MIN (single speed)<br>2~16 M/MIN (double speed) |
| | | MOTOR | 0.5 KW x 6 P |
| WIRE ROPE | | | (6x37) ø16 x 2 FALLS |
| POWER SOURCE | | | AC3ø 220V(380,440,460,480)V 60Hz |
| COLOR | | | 10 B 3/5 |
| WEIGHT | | | 615 KG |

| TRAVERSING I - BEAM A x B x t | Ix ($Cm^4$) | Zx ($Cm^3$) | SUPPORT LENGTH | C |
|---|---|---|---|---|
| I-300 x 150 x 10 | 12700 | 849 | MAX. 4.5M | 465 |
| I-350 x 150 x 10 | 22400 | 1280 | MAX. 6.1M | 465 |
| I-400 x 150 x 10 | 24100 | 1200 | MAX. 5.7M | 465 |
| I-450 x 175 x 11 | 39200 | 1740 | MAX. 7.8M | 480 |

| REV | DATE | DESCRIPTION | DRAWN | CHECK | APPRVD |
|---|---|---|---|---|---|
| A | 20.JAN.2021 | REDRAWING | K.H.Han | - | - |

| SCALE | SHT. NO. | REV. | TITLE |
|---|---|---|---|
| 1:1 | - | - | ARRANGEMENT DRAWING KDV5-L9-M |

극동호이스트 주식회사
KUKDONG HOIST CO., LTD.

DWG. NO. KDV5M-9000

불법복제 및 배포금지
192.168.11.51 / 2021-02-05 15:49:22

| | |
|---|---|
| 형식번호 | KDV5-M |
| 모 델 명 | KDV5-L12-M |

| NO | DESCRIPTION | MATERIAL | Q'TY | SIZE | REMARK |
|---|---|---|---|---|---|
| 1 | LOAD LIMITER | | 1 | | |
| 2 | EMERGENCY S/W | | 1 | | |
| 3 | SAFETY LATCH | SPC | 1 | | |
| 4 | UPPER LIMIT S/W | SS275 | 1 | | |
| 5 | I-BEAM | SS275 | | TABLE 참조 | |

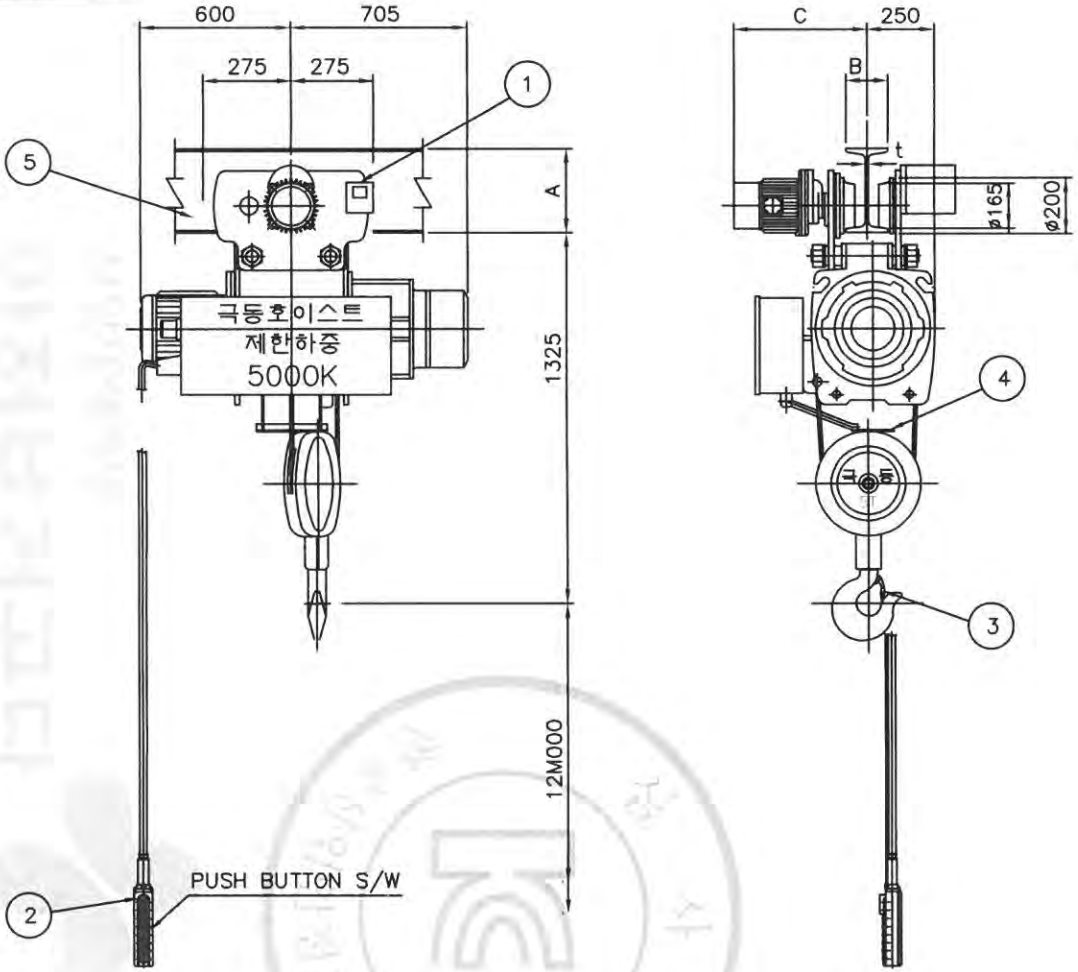


| SPECIFICATION | | | |
|---|---|---|---|
| RATED LOAD | | | 5000 KG |
| TESTING LOAD | | | 6250 KG |
| LIFT | | | 12 M |
| RATING | | | 30 MIN |
| HOISTING (inverter control) | HIGH | SPEED | 5.6 M/MIN (single speed)<br>0.56~5.6 M/MIN (double speed) |
| | | MOTOR | 5.5 KW x 6 P |
| | LOW | SPEED | 4.2 M/MIN (single speed)<br>0.42~4.2 M/MIN (double speed) |
| | | MOTOR | 4.2 KW x 8 P |
| TRAVERSING (inverter control) | HIGH | SPEED | 24 M/MIN (single speed)<br>2~24 M/MIN (double speed) |
| | | MOTOR | 0.75 KW x 4 P |
| | LOW | SPEED | 16 M/MIN (single speed)<br>2~16 M/MIN (double speed) |
| | | MOTOR | 0.5 KW x 6 P |
| WIRE ROPE | | | (6x37) ø16 x 2 FALLS |
| POWER SOURCE | | | AC3ø 220V(380,440,460,480)V 60Hz |
| COLOR | | | 10 B 3/5 |
| WEIGHT | | | 645 KG |

| TRAVERSING I - BEAM A x B x t | Ix ($Cm^4$) | Zx ($Cm^3$) | SUPPORT LENGTH | C |
|---|---|---|---|---|
| I-300 x 150 x 10 | 12700 | 849 | MAX. 4.5M | 465 |
| I-350 x 150 x 10 | 22400 | 1280 | MAX. 6.1M | 465 |
| I-400 x 150 x 10 | 24100 | 1200 | MAX. 5.7M | 465 |
| I-450 x 175 x 11 | 39200 | 1740 | MAX. 7.8M | 480 |

| REV | DATE | DESCRIPTION | DRAWN | CHECK | APPRVD |
|---|---|---|---|---|---|
| A | 20JAN.2021 | REDRAWING | K.H.Han | - | - |

| SCALE | SHT. NO. | REV. | TITLE |
|---|---|---|---|
| 1:1 | - | - | ARRANGEMENT DRAWING KDV5-L12-M |

극동호이스트 주식회사 KUKDONG HOIST CO., LTD.

DWG. NO. KDV5M-12000

192.168.11.51 / 2021-02-05 15:49:22
불법복제 및 배포금지

| | |
|---|---|
| 형식번호 | KDV5-M |
| 모 델 명 | KDV5-L18-M |

| NO | DESCRIPTION | MATERIAL | Q'TY | SIZE | REMARK |
|---|---|---|---|---|---|
| 1 | LOAD LIMITER | | 1 | | |
| 2 | EMERGENCY S/W | | 1 | | |
| 3 | SAFETY LATCH | SPC | 1 | | |
| 4 | UPPER LIMIT S/W | SS275 | 1 | | |
| 5 | I-BEAM | SS275 | | TABLE 참조 | |

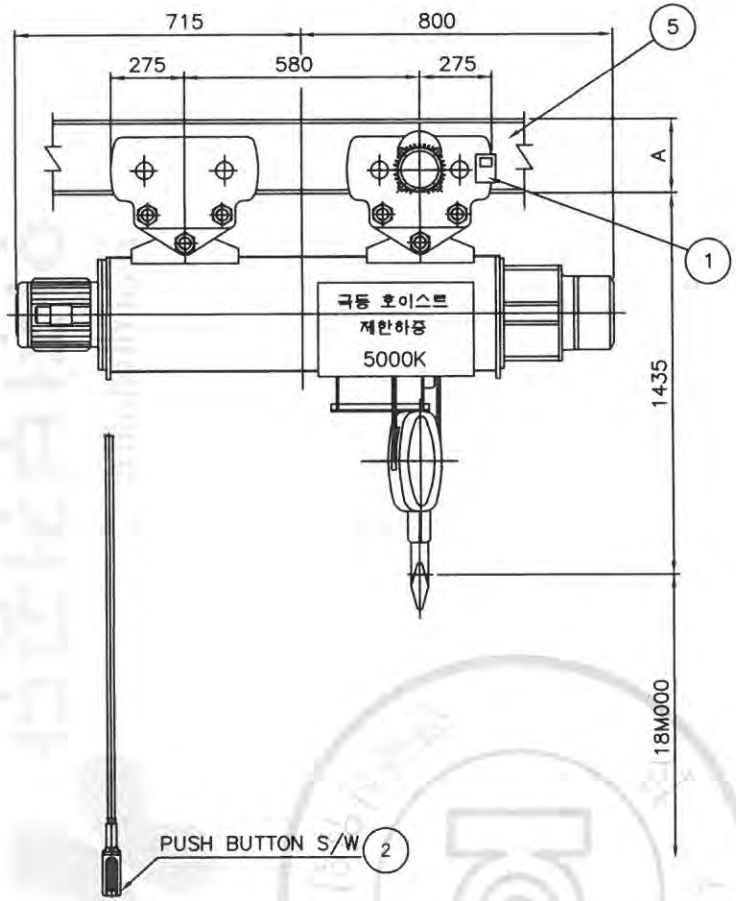


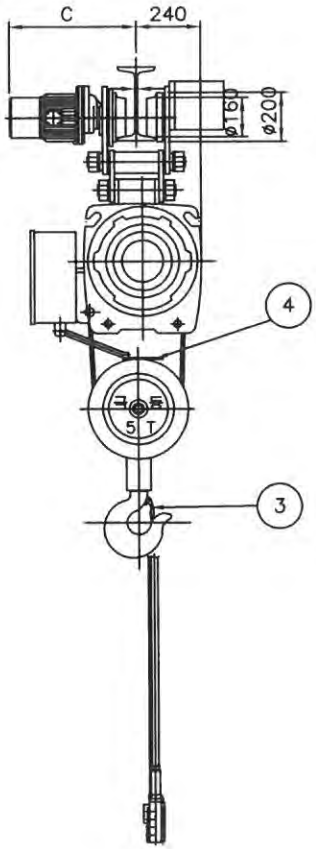


| SPECIFICATION | | | |
|---|---|---|---|
| RATED LOAD | | | 5000 KG |
| TESTING LOAD | | | 6250 KG |
| LIFT | | | 18 M |
| RATING | | | 30 MIN |
| HOISTING (inverter control) | HIGH | SPEED | 5.6 M/MIN (single speed)<br>0.56~5.6 M/MIN (double speed) |
| | | MOTOR | 5.5 KW x 6 P |
| | LOW | SPEED | 4.2 M/MIN (single speed)<br>0.42~4.2 M/MIN (double speed) |
| | | MOTOR | 4.2 KW x 8 P |
| TRAVERSING (inverter control) | HIGH | SPEED | 24 M/MIN (single speed)<br>2~24 M/MIN (double speed) |
| | | MOTOR | 0.75 KW x 4 P |
| | LOW | SPEED | 16 M/MIN (single speed)<br>2~16 M/MIN (double speed) |
| | | MOTOR | 0.5 KW x 6 P |
| WIRE ROPE | | | (6x37) ø16 x 2 FALLS |
| POWER SOURCE | | | AC3ø 220V(380,440,460,480)V 60Hz |
| COLOR | | | 10 B 3/5 |
| WEIGHT | | | 860 KG |

| TRAVERSING I - BEAM<br>A x B x t | Ix<br>($Cm^4$) | Zx<br>($Cm^3$) | SUPPORT LENGTH | C |
|---|---|---|---|---|
| I-300 x 150 x 10 | 12700 | 849 | MAX. 4.5M | 465 |
| I-350 x 150 x 12 | 22400 | 1280 | MAX. 6.1M | 465 |
| I-400 x 150 x 10 | 24100 | 1200 | MAX. 5.7M | 465 |
| I-450 x 175 x 11 | 39200 | 1740 | MAX. 7.8M | 480 |

| REV | DATE | DESCRIPTION | DRAWN | CHECK | APPRVD |
|---|---|---|---|---|---|
| A | 20.JAN.2021 | REDRAWING | K.H.Han | - | - |

| SCALE | SHT. NO. | REV. | TITLE |
|---|---|---|---|
| 1:1 | - | - | ARRANGEMENT DRAWING KDV5-L18-M |

극동호이스트 주식회사
KUKDONG HOIST CO., LTD.

DWG. NO. KDV5M-18000

불법복제 및 배포금지
192.168.11.51 / 2021-02-05 15:49:22

| | |
|---|---|
| 형식번호 | KDV5-M |
| 모 델 명 | KDV5-L24-M |

| NO | DESCRIPTION | MATERIAL | Q'TY | SIZE | REMARK |
|---|---|---|---|---|---|
| 1 | LOAD LIMITER | | 1 | | |
| 2 | EMERGENCY S/W | | 1 | | |
| 3 | SAFETY LATCH | SPC | 1 | | |
| 4 | UPPER LIMIT S/W | SS275 | 1 | | |
| 5 | I-BEAM | SS275 | | TABLE 참조 | |

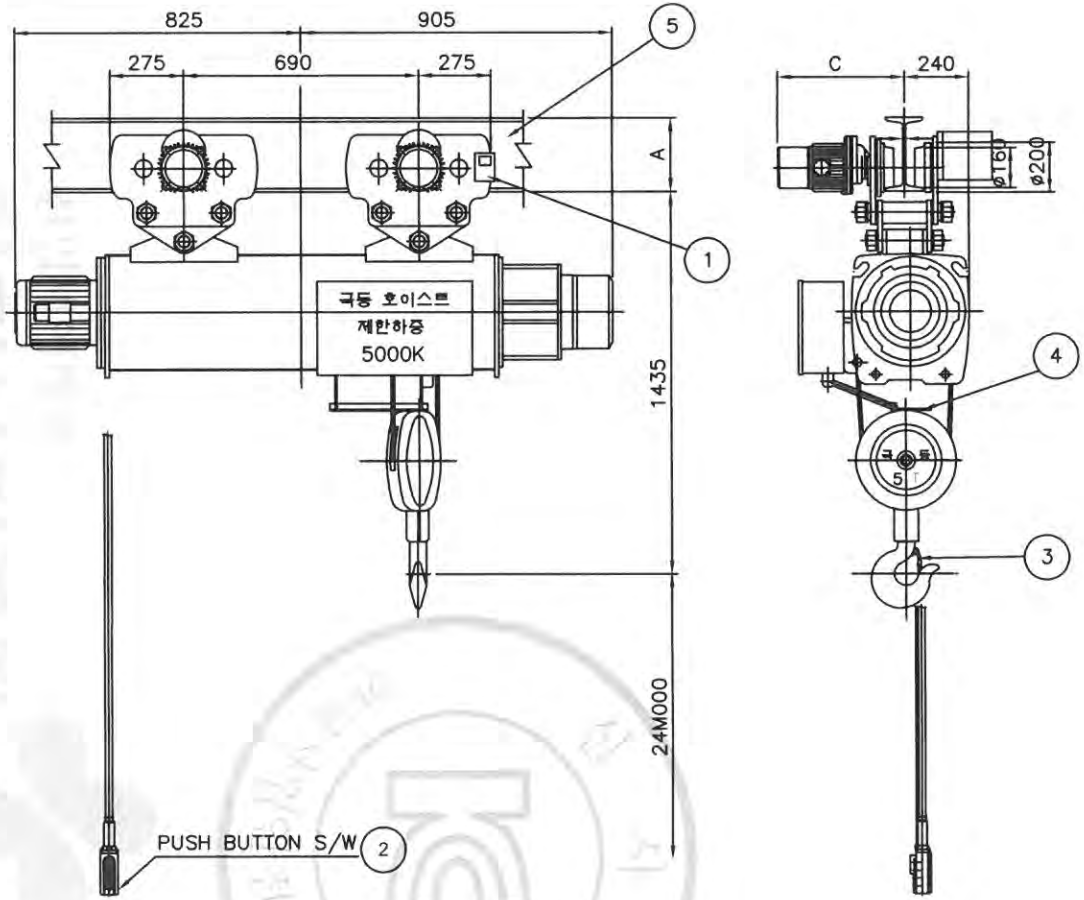


| SPECIFICATION | | | |
|---|---|---|---|
| RATED LOAD | | | 5000 KG |
| TESTING LOAD | | | 6250 KG |
| LIFT | | | 24 M |
| RATING | | | 30 MIN |
| HOISTING (inverter control) | HIGH | SPEED | 5.6 M/MIN (single speed)<br>0.56~5.6 M/MIN (double speed) |
| | | MOTOR | 5.5 KW x 6 P |
| | LOW | SPEED | 4.2 M/MIN (single speed)<br>0.42~4.2 M/MIN (double speed) |
| | | MOTOR | 4.2 KW x 8 P |
| TRAVERSING (inverter control) | HIGH | SPEED | 24 M/MIN (single speed)<br>2~24 M/MIN (double speed) |
| | | MOTOR | 2 x 0.75 KW x 4 P |
| | LOW | SPEED | 16 M/MIN (single speed)<br>2~16 M/MIN (double speed) |
| | | MOTOR | 2 x 0.5 KW x 6 P |
| WIRE ROPE | | | (6x37) ø16 x 2 FALLS |
| POWER SOURCE | | | AC3ø 220V(380,440,460,480)V 60Hz |
| COLOR | | | 10 B 3/5 |
| WEIGHT | | | 920 KG |

| TRAVERSING I - BEAM A x B x t | Ix ($Cm^4$) | Zx ($Cm^3$) | SUPPORT LENGTH | C |
|---|---|---|---|---|
| I-300 x 150 x 10 | 12700 | 849 | MAX. 4.5M | 465 |
| I-350 x 150 x 10 | 22400 | 1280 | MAX. 6.1M | 465 |
| I-400 x 150 x 10 | 24100 | 1200 | MAX. 5.7M | 465 |
| I-450 x 175 x 11 | 39200 | 1740 | MAX. 7.8M | 480 |

| REV | DATE | DESCRIPTION | DRAWN | CHECK | APPRVD |
|---|---|---|---|---|---|
| A | 20.JAN.2021 | REDRAWING | K.H.Han | - | - |

| SCALE | SHT. NO. | REV. | TITLE |
|---|---|---|---|
| 1:1 | - | - | ARRANGEMENT DRAWING KDV5-L24-M |

극동호이스트 주식회사
KUKDONG HOIST CO., LTD.

DWG. NO. KDV5M-24000

192.168.11.51 / 2021-02-05 15:49:22
불법복제 및 배포금지

| | |
|---|---|
| 형식번호 | KDV5-M |
| 모 델 명 | KDV5-L30-M |

| NO | DESCRIPTION | MATERIAL | Q'TY | SIZE | REMARK |
|---|---|---|---|---|---|
| 1 | LOAD LIMITER | | 1 | | |
| 2 | EMERGENCY S/W | | 1 | | |
| 3 | SAFETY LATCH | SPC | 1 | | |
| 4 | UPPER LIMIT S/W | SS275 | 1 | | |
| 5 | I-BEAM | SS275 | | TABLE 참조 | |

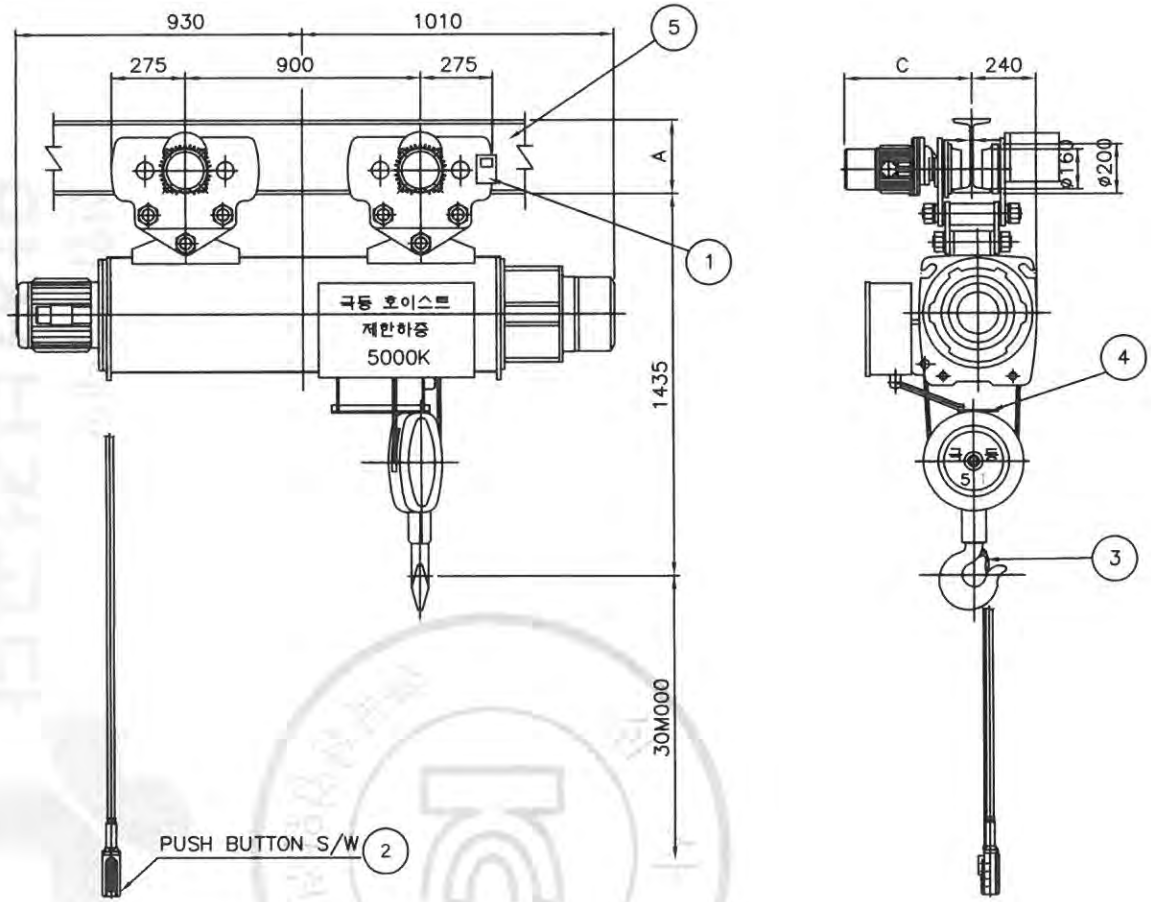


| SPECIFICATION | | | |
|---|---|---|---|
| RATED LOAD | | | 5000 KG |
| TESTING LOAD | | | 6250 KG |
| LIFT | | | 30 M |
| RATING | | | 30 MIN |
| HOISTING (inverter control) | HIGH | SPEED | 5.6 M/MIN (single speed)<br>0.56~5.6 M/MIN (double speed) |
| | | MOTOR | 5.5 KW x 6 P |
| | LOW | SPEED | 4.2 M/MIN (single speed)<br>0.42~4.2 M/MIN (double speed) |
| | | MOTOR | 4.2 KW x 8 P |
| TRAVERSING (inverter control) | HIGH | SPEED | 24 M/MIN (single speed)<br>2~24 M/MIN (double speed) |
| | | MOTOR | 2 x 0.75 KW x 4 P |
| | LOW | SPEED | 16 M/MIN (single speed)<br>2~16 M/MIN (double speed) |
| | | MOTOR | 2 x 0.5 KW x 6 P |
| WIRE ROPE | | | (6x37) ø16 x 2 FALLS |
| POWER SOURCE | | | AC3ø 220V(380,440,460,480)V 60Hz |
| COLOR | | | 10 B 3/5 |
| WEIGHT | | | 980 KG |

| TRAVERSING I - BEAM A x B x t | Ix ($Cm^4$) | Zx ($Cm^3$) | SUPPORT LENGTH | C |
|---|---|---|---|---|
| I-300 x 150 x 10 | 12700 | 849 | MAX. 4.5M | 465 |
| I-350 x 150 x 12 | 22400 | 1280 | MAX. 6.1M | 465 |
| I-400 x 150 x 10 | 24100 | 1200 | MAX. 5.7M | 465 |
| I-450 x 175 x 11 | 39200 | 1740 | MAX. 7.8M | 480 |

| REV | DATE | DESCRIPTION | DRAWN | CHECK | APPRVD |
|---|---|---|---|---|---|
| A | 20.JAN.2021 | REDRAWING | K.H.Han | - | - |

| SCALE | SHT. NO. | REV. | TITLE |
|---|---|---|---|
| 1:1 | - | - | ARRANGEMENT DRAWING KDV5-L30-M |

극동호이스트 주식회사
KUKDONG HOIST CO., LTD.

DWG. NO. KDV5M-30000

불법복제 및 배포금지
192.168.11.51 / 2021-02-05 15:49:22

| 1 | 2 | 3 | 4 | 5 | 6 | 7 | 8 | 9 | 10 | 11 | 12 | 13 | 14 | 15 | 16 | 17 | 18 | 19 | 20 |
|---|---|---|---|---|---|---|---|---|---|---|---|---|---|---|---|---|---|---|---|

ADR'S NO.

* MAIN POWER : AC 3PH 220V,380V,440V,460V,480V 60Hz (LIFT 6M, 9M, 12M, 18M)

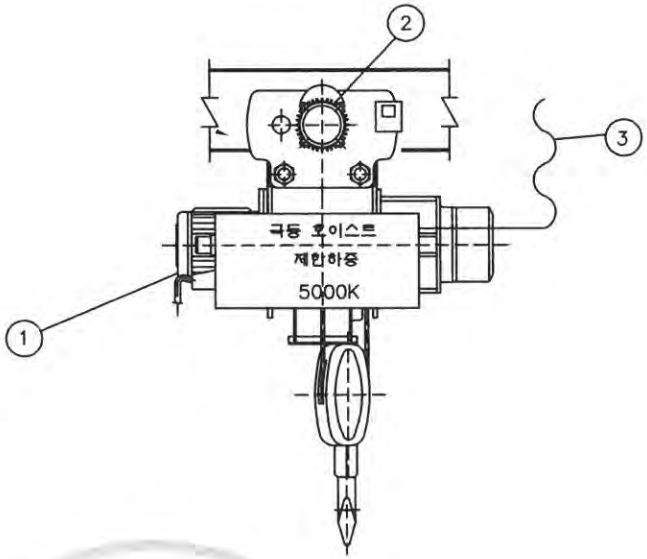


-NOTE-

접지

1. 전기장치 외함접지는 접지단자를 이용하여 설치해야 하며
   1) 400볼트 미만일 때 100오옴 이하일 것
   2) 400볼트 이상일 때 10오옴 이하일 것
2. 접지단자에는 다음중 하나의 방법으로 표기
   1) 기호로 표현하는 경우: ⏚
   2) 문자로 표기하는 경우:PE
   3) 녹색 또는 녹색 및 황색 조합 접지선

본 도면은 EARTH를 명기하기 위한 도면으로서
실제 배치와 다를 수 있으며 HOIST 본체와의
EARTH용 CABLE은 REFERENCE임

| NO | CABLE | | | | | REMARK |
|---|---|---|---|---|---|---|
| | TYPE | SIZE | | | | |
| | | 220V | 380V | TYPE | 440V,460V,480V | |
| 1 | VCT | 6.0sq | 4.0sq | VCT | 4.0sq | HOISTING MOTOR WITH EARTH |
| 2 | VCT | 4.0sq | 4.0sq | VCT | 4.0sq | T/S MOTOR WITH EARTH |
| 3 | VCT | 10.0sq | 4.0sq | VFCT | 4.0sq | MAIN POWER WITH EARTH |

등전위접지

1.전기장비와 기계의 노출된 모든 도전부는 보호본딩회로에 연결되어야 하며 적절한 접지연속성 기능이 유지되야함.

2. 보호본딩회로에는 개폐기, 과전류보호장치가 부착되지 않아야 한다.

| 시험대상 전선의 최소 유효단면적 | 최고전압강하(V) |
|---|---|
| 1.0 | 3.3 |
| 1.5 | 2.6 |
| 2.5 | 1.6 |
| 4.0 | 1.4 |
| >6.0 | 1.0 |

| REV | DATE | DESCRIPTION | DRAWN | CHECK | APPRVD |
|---|---|---|---|---|---|
| A | 20.JAN.2021 | REDRAWING | K.H.Han | - | - |

TITLE
GROUND WIRE SYSTEM
KDV5-M

CUSTOMER

극동호이스트 주식회사
KUKDONG HOIST CO., LTD.

| DESIGN | SCALE | SHT. NO. | ORDER NO. |
|---|---|---|---|
| | | | |

DWG. NO.
KD5M6011

192.168.11.51 / 2021-02-05 15:49:22
불법복제 및 배포금지

| 1 | 2 | 3 | 4 | 5 | 6 | 7 | 8 | 9 | 10 | 11 | 12 | 13 | 14 | 15 | 16 | 17 | 18 | 19 | 20 |
|---|---|---|---|---|---|---|---|---|---|---|---|---|---|---|---|---|---|---|---|

ADR'S NO.

* MAIN POWER : AC 3PH 220V,380V,440V,460V,480V 60Hz (LIFT 24M, 30M)

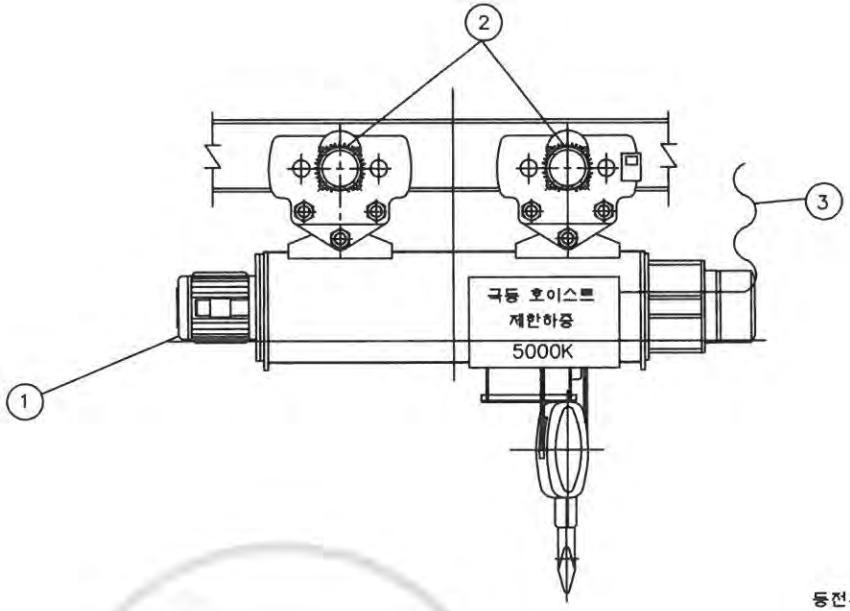


-NOTE-

접지

1. 전기장치 외함접지는 접지단자를 이용하여 설치해야 하며
   1) 400볼트 미만일 때 100오옴 이하일 것
   2) 400볼트 이상일 때 10오옴 이하일 것
2. 접지단자에는 다음중 하나의 방법으로 표기
   1) 기호로 표현하는 경우: ⏚
   2) 문자로 표기하는 경우:PE
   3) 녹색 또는 녹색 및 황색 조합 접지선

등전위접지

1.전기장비와 기계의 노출된 모든 도전부는 보호본딩회로에 연결되어야 하며 적절한 접지연속성 기능이 유지되야함.

2. 보호본딩회로에는 개폐기, 과전류보호장치가 부착되지 않아야 한다.

본 도면은 EARTH를 명기하기 위한 도면으로서 실제 배치와 다를 수 있으며 HOIST 본체와의 EARTH용 CABLE은 REFERENCE임

| NO | CABLE | | | | | REMARK |
|---|---|---|---|---|---|---|
| | TYPE | SIZE | | | | |
| | | 220V | 380V | TYPE | 440V,460V,480V | |
| 1 | VCT | 6.0sq | 4.0sq | VCT | 4.0sq | HOISTING MOTOR WITH EARTH |
| 2 | VCT | 4.0sq | 4.0sq | VCT | 4.0sq | T/S MOTOR WITH EARTH |
| 3 | VCT | 10.0sq | 4.0sq | VFCT | 4.0sq | MAIN POWER WITH EARTH |

| 시험대상 전선의 최소 유효단면적 | 최고전압강하(V) |
|---|---|
| 1.0 | 3.3 |
| 1.5 | 2.6 |
| 2.5 | 1.6 |
| 4.0 | 1.4 |
| >6.0 | 1.0 |

| REV | DATE | DESCRIPTION | DRAWN | CHECK | APPRVD |
|---|---|---|---|---|---|
| A | 20.JAN.2021 | REDRAWING | K.H.Han | - | - |

TITLE
GROUND WIRE SYSTEM
KDV5-M

CUSTOMER

극동호이스트 주식회사
KUKDONG HOIST CO., LTD.

| DESIGN | SCALE | SHT. NO. | ORDER NO. |
|---|---|---|---|
| | | | |

DWG. NO.
KD5M6012

192.168.11.51 / 2021-02-05 15:49:22

불법복제 및 배포금지

| 1 | 2 | 3 | 4 | 5 | 6 | 7 | 8 | 9 | 10 | 11 | 12 | 13 | 14 | 15 | 16 | 17 | 18 | 19 | 20 |
|---|---|---|---|---|---|---|---|---|---|---|---|---|---|---|---|---|---|---|---|

ADR'S NO.

* MAIN POWER : AC 3PH 220V,380V,440V,460V,480V 60Hz (LIFT 6M, 9M, 12M, 18M, 24M)

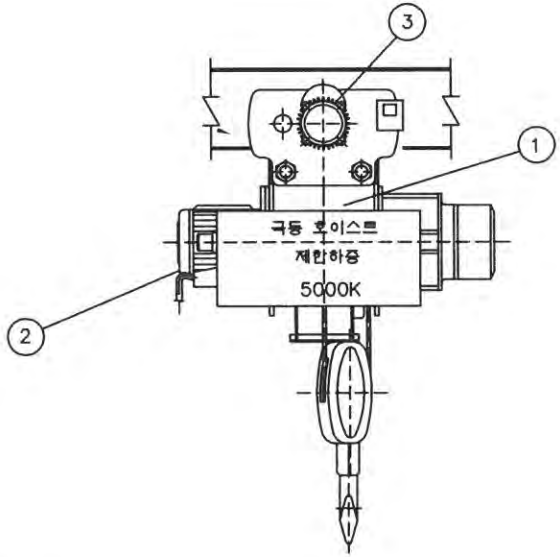


1

| KD ELECTRIC WIRE ROPE HOIST | | | |
|---|---|---|---|
| MODEL | | RATING | min |
| CAPACITY | Kg | LIFT | m |
| HOIST SPEED | m/min | POWER SOURCE | V Hz |
| HOIST MOTOR | Kw P | AMP.S R&T HOIST | A |
| TRAV.SPEED | m/min | AMP.S R&T TRAV. | A |
| TRAV.MOTOR | Kw P | WIRE ROPE | Ø |
| WIDTH OF RAIL | mm | WEIGET | Kg |
| DATE | | SERIAL | |
| KUKDONG HOIST CO.,LTD | | | |

2

| KD 3 PHASE INDUCTION MOTOR | | | |
|---|---|---|---|
| KW | P | TYPE | TENV |
| VOLTS | V | RATING | min |
| AMP.S | A | AMP.TEMP | 40℃ |
| HEARTS | | INS.CLASS | F |
| R.P.M | | BEARING | |
| ROTOR | C | BEARING | |
| SERIAL. | | DATE | |
| KUKDONG HOIST CO.,LTD | | | |

3

| KD 3 PHASE INDUCTION MOTOR | | | |
|---|---|---|---|
| KW | P | TYPE | TENV |
| VOLTS | V | RATING | min |
| AMP.S | A | AMP.TEMP | 40℃ |
| HEARTS | | INS.CLASS | F |
| R.P.M | | BEARING | |
| ROTOR | C | BEARING | |
| SERIAL. | | DATE | |
| KUKDONG HOIST CO.,LTD | | | |

| REV | DATE | DESCRIPTION | DRAWN | CHECK | APPRVD |
|---|---|---|---|---|---|
| A | 20.JAN.2021 | REDRAWING | K.H.Han | - | - |

TITLE: WIRE HOIST NAME PLATE

KDV5-M

CUSTOMER

KD 극동호이스트 주식회사 KUKDONG HOIST CO., LTD.

| DESIGN | SCALE | SHT. NO. | ORDER NO. |
|---|---|---|---|
| | | | |

DWG. NO. KD5MD6030

192.168.11.51 / 2021-02-05 15:49:22

불법복제 및 배포금지

| 1 | 2 | 3 | 4 | 5 | 6 | 7 | 8 | 9 | 10 | 11 | 12 | 13 | 14 | 15 | 16 | 17 | 18 | 19 | 20 |
|---|---|---|---|---|---|---|---|---|---|---|---|---|---|---|---|---|---|---|---|

ADR'S NO.

* MAIN POWER : AC 3PH 220V,380V,440V,460V,480V 60Hz (LIFT 24, 30M)

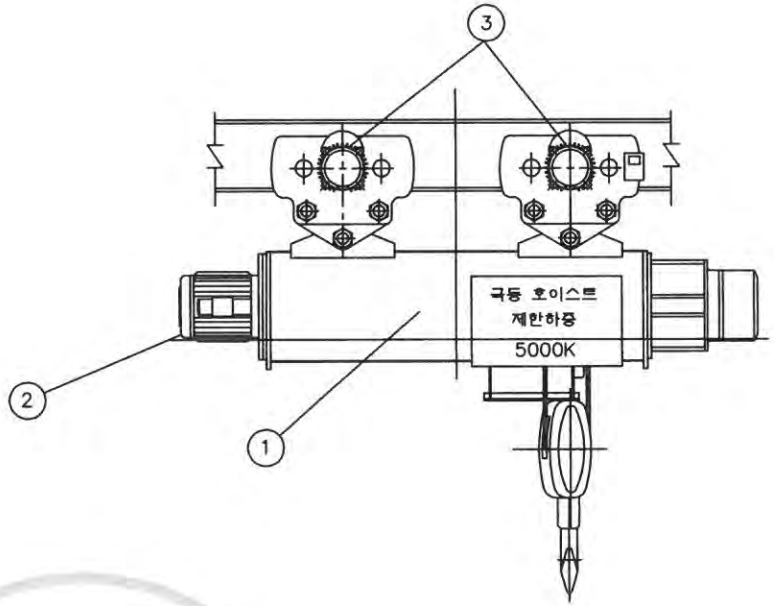


1

| KD ELECTRIC WIRE ROPE HOIST | | | |
|---|---|---|---|
| MODEL | | RATING | min |
| CAPACITY | Kg | LIFT | m |
| HOIST SPEED | m/min | POWER SOURCE | V Hz |
| HOIST MOTOR | Kw P | AMP.S R&T HOIST | A |
| TRAV.SPEED | m/min | AMP.S R&T TRAV. | A |
| TRAV.MOTOR | Kw P | WIRE ROPE | Ø |
| WIDTH OF RAIL | mm | WEIGET | Kg |
| DATE | | SERIAL | |
| KUKDONG HOIST CO.,LTD | | | |

2

| KD 3 PHASE INDUCTION MOTOR | | | |
|---|---|---|---|
| KW | P | TYPE | TENV |
| VOLTS | V | RATING | min |
| AMP.S | A | AMP.TEMP | 40℃ |
| HEARTS | | INS.CLASS | F |
| R.P.M | | BEARING | |
| ROTOR | C | BEARING | |
| SERIAL. | | DATE | |
| KUKDONG HOIST CO.,LTD | | | |

3

| KD 3 PHASE INDUCTION MOTOR | | | |
|---|---|---|---|
| KW | P | TYPE | TENV |
| VOLTS | V | RATING | min |
| AMP.S | A | AMP.TEMP | 40℃ |
| HEARTS | | INS.CLASS | F |
| R.P.M | | BEARING | |
| ROTOR | C | BEARING | |
| SERIAL. | | DATE | |
| KUKDONG HOIST CO.,LTD | | | |

| REV | DATE | DESCRIPTION | DRAWN | CHECK | APPRVD |
|---|---|---|---|---|---|
| A | 20.JAN.2021 | REDRAWING | K.H.Han | - | - |

TITLE: WIRE HOIST NAME PLATE

KDV5-M

CUSTOMER

KD 극동호이스트 주식회사
KUKDONG HOIST CO., LTD.

| DESIGN | SCALE | SHT. NO. | ORDER NO. |
|---|---|---|---|
| | | | |

DWG. NO. KD5M6031

192.168.11.51 / 2021-02-05 15:49:22

불법복제 및 배포금지

192.168.11.51 / 2021-02-05 15:49:22

불법복제 및 배포금지

ADR'S NO.

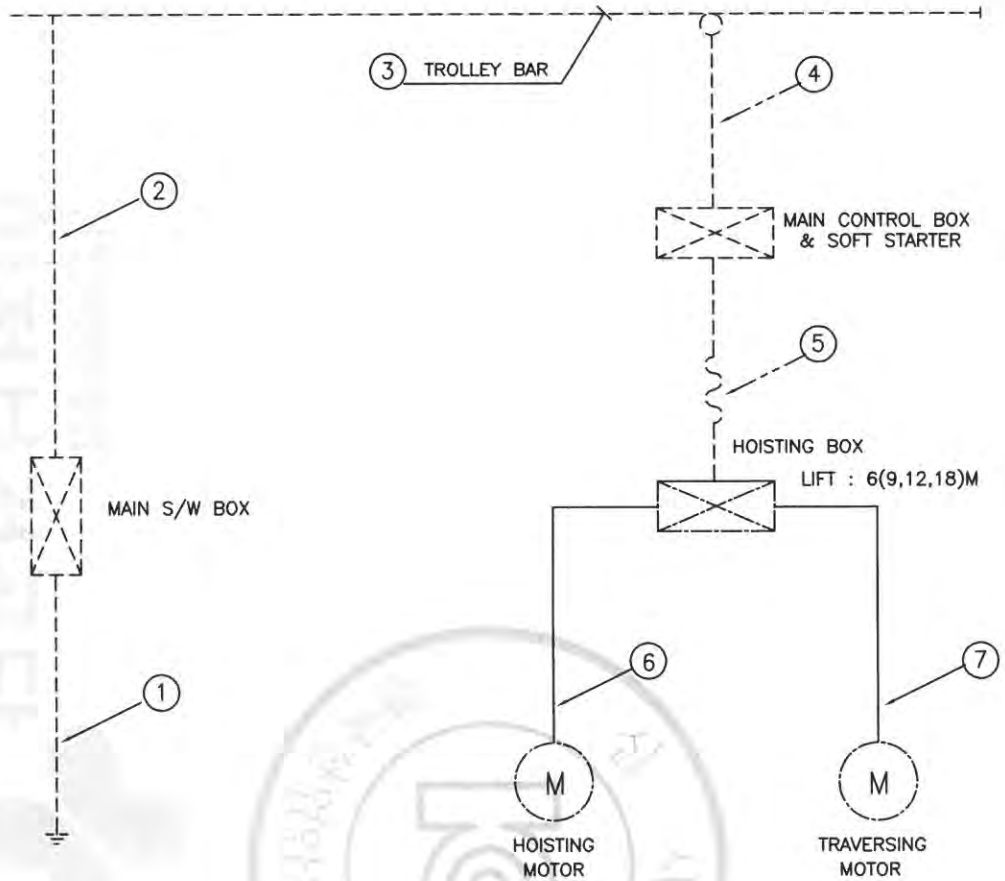


| NO | DESCRIPTION | CABLE SIZE | |
|---|---|---|---|
| 1 | MAIN EARTH LINE | USER SCOPE | |
| 2 | POWER SOURCE | USER SCOPE | |
| 3 | TROLLEY BAR | USER SCOPE | |
| 4 | POWER SOURCE WITH EARTH | USER SCOPE | |
| 5 | HOIST POWER SOURCE WITH EARTH | 220V<br>380,440,460,480V | VCT 10.0SQ x 1C<br>VCT 4.0SQ x 1C |
| 6 | HOISTING MOTOR WITH EARTH | 220V<br>380,440,460,480V | VCT 6.0SQ x 1C<br>VCT 4.0SQ x 1C |
| 7 | TRAVERSING MOTOR WITH EARTH | VCT 4.0SQ x 1C | |

** CV CABLE 4C중 1C는 EARTH로 사용함.*

–NOTE–

접지

1. 전기장치 외함접지는 접지단자를 이용하여 설치해야 하며
   1) 400볼트 미만일 때 100오옴 이하일 것
   2) 400볼트 이상일 때 10오옴 이하일 것
2. 접지단자에는 다음중 하나의 방법으로 표기
   1) 기호로 표현하는 경우: ⏚
   2) 문자로 표기하는 경우:PE
   3) 녹색 또는 녹색 및 황색 조합 접지선

등전위접지

1.전기장비와 기계의 노출된 모든 도전부는 보호본딩회로에 연결되어야 하며 적절한 접지연속성 기능이 유지되야함.

2. 보호본딩회로에는 개폐기, 과전류보호장치가 부착되지 않아야 한다.

| 시험대상 전선의 최소 유효단면적 | 최고전압강하(V) |
|---|---|
| 1.0 | 3.3 |
| 1.5 | 2.6 |
| 2.5 | 1.6 |
| 4.0 | 1.4 |
| >6.0 | 1.0 |

USER SCOPE
KUKDONG SCOPE

| REV | DATE | DESCRIPTION | DRAWN | CHECK | APPRVD |
|---|---|---|---|---|---|
| A | 20.JAN.2021 | REDRAWING | K.H.Han | - | - |

TITLE
EARTH DETAILS DRAWING
KDV5-M

CUSTOMER

극동호이스트 주식회사
KUKDONG HOIST CO., LTD.

| DESIGN | SCALE | SHT. NO. | ORDER NO. |
|---|---|---|---|
| | | | |

DWG. NO.
KD5-EC001

| 1 | 2 | 3 | 4 | 5 | 6 | 7 | 8 | 9 | 10 | 11 | 12 | 13 | 14 | 15 | 16 | 17 | 18 | 19 | 20 |
|---|---|---|---|---|---|---|---|---|---|---|---|---|---|---|---|---|---|---|---|

ADR'S NO.

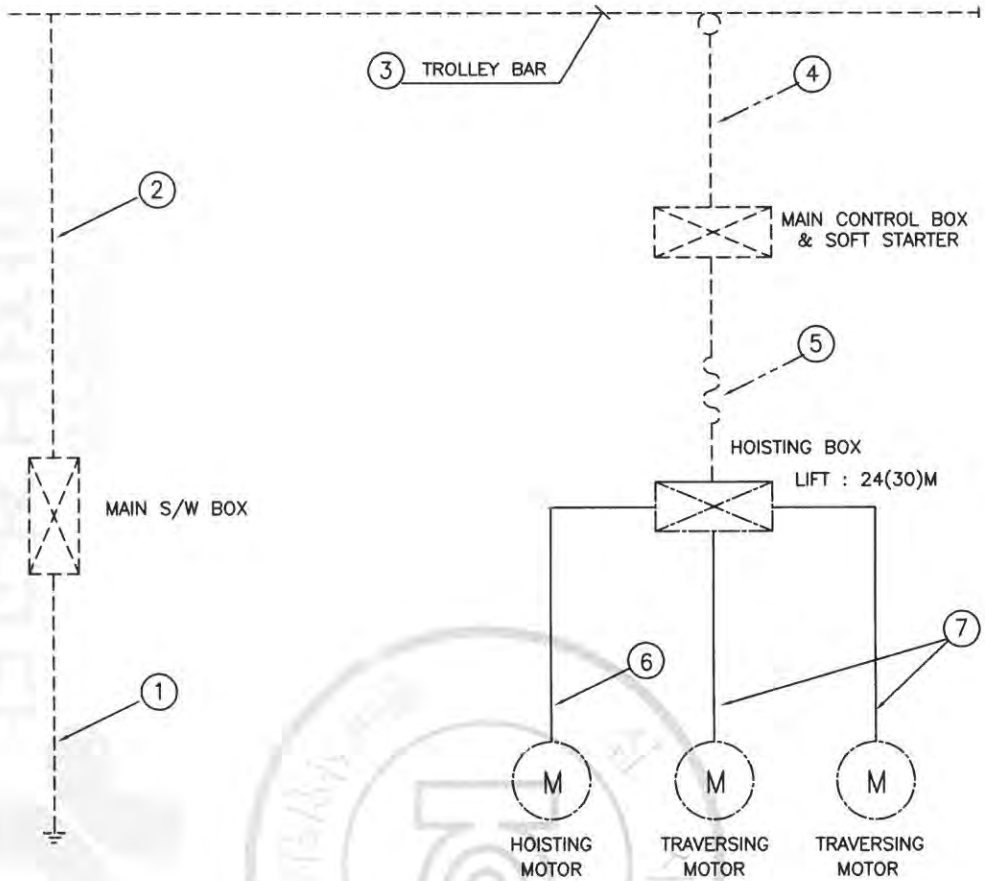


| NO | DESCRIPTION | CABLE SIZE | |
|---|---|---|---|
| 1 | MAIN EARTH LINE | USER SCOPE | |
| 2 | POWER SOURCE | USER SCOPE | |
| 3 | TROLLEY BAR | USER SCOPE | |
| 4 | POWER SOURCE WITH EARTH | USER SCOPE | |
| 5 | HOIST POWER SOURCE WITH EARTH | 220V<br>380,440,460,480V | VCT 10.0SQ x 1C<br>VCT 4.0SQ x 1C |
| 6 | HOISTING MOTOR WITH EARTH | 220V<br>380,440,460,480V | VCT 6.0SQ x 1C<br>VCT 4.0SQ x 1C |
| 7 | TRAVERSING MOTOR WITH EARTH | VCT 4.0SQ x 1C | |

** CV CABLE 4C중 1C는 EARTH로 사용함.*

-NOTE-

접지

1. 전기장치 외함접지는 접지단자를 이용하여 설치해야 하며
   1) 400볼트 미만일 때 100오옴 이하일 것
   2) 400볼트 이상일 때 10오옴 이하일 것
2. 접지단자에는 다음중 하나의 방법으로 표기
   1) 기호로 표현하는 경우: ⏚
   2) 문자로 표기하는 경우:PE
   3) 녹색 또는 녹색 및 황색 조합 접지선

등전위접지

1.전기장비와 기계의 노출된 모든 도전부는 보호본딩회로에 연결되어야 하며 적절한 접지연속성 기능이 유지되야함.

2. 보호본딩회로에는 개폐기, 과전류보호장치가 부착되지 않아야 한다.

| 시험대상 전선의 최소 유효단면적 | 최고전압강하(V) |
|---|---|
| 1.0 | 3.3 |
| 1.5 | 2.6 |
| 2.5 | 1.6 |
| 4.0 | 1.4 |
| >6.0 | 1.0 |

USER SCOPE
KUKDONG SCOPE

| REV | DATE | DESCRIPTION | DRAWN | CHECK | APPRVD |
|---|---|---|---|---|---|
| A | 20.JAN.2021 | REDRAWING | K.H.Han | - | - |

TITLE
EARTH DETAILS DRAWING
KDV5-M

CUSTOMER

극동호이스트 주식회사
KUKDONG HOIST CO., LTD.

| DESIGN | SCALE | SHT. NO. | ORDER NO. |
|---|---|---|---|
| | | | |

DWG. NO.
KD5-EC001

192.168.11.51 / 2021-02-05 15:49:22
불법복제 및 배포금지

ADR'S NO.

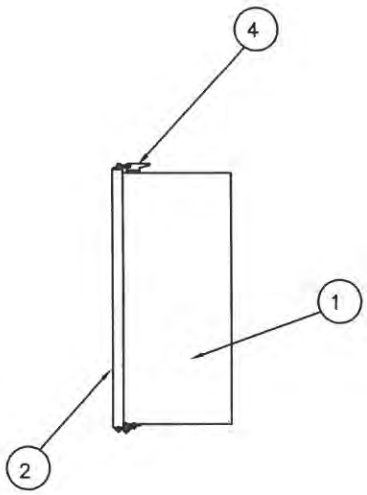


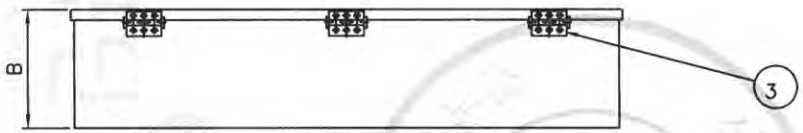


| NO | DESCRIPTION | MT'L | REMARKS |
|---|---|---|---|
| 1 | PANEL CASE | SPC | 1.6t |
| 2 | PANEL COVER | SPC | 1.6t |
| 3 | HINGE | PUR' | |
| 4 | CLAMP | PUR' | |
| 5 | SPONGE | PUR' | |

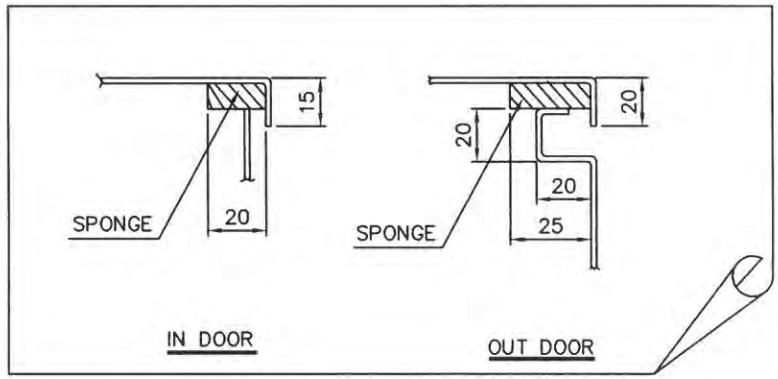


| HOIST CAPACITY | IN DOOR | | | OUT DOOR | | | REMARK |
|---|---|---|---|---|---|---|---|
| | A | B | L | A | B | L | |
| 5 TON | 430 | 220 | 900 | 430 | 220 | 900 | |

N O T E

1.PROTECTION DEGREE ;

A, INDOOR TYPE : DUST PROOF

B, OUT DOOR TYPE : SPLASH PROOF

2.FINAL PAINTING COLOR (MUNSELL NO.)

A. IN SIDE : 10B 3/5

B. OUT SIDE : 10B 3/5

3.PAINTING THICKNESS : ABOVE 40 um

4.APPLICATION VOLTAGE : 220V,380V,440V,460V,480V

5.제어용 전선 : 1.5sq KIV,HIV

6.외함 개방 구조는 다음과 같다.

1) 외함 개방시 충전 부분이 차단되도록 한다.

2) 외함 개방 후 충전되어있는 부분은 IP2X 이상의 직접 접촉 방호가 되어있을것.

192.168.11.51 / 2021-02-05 15:49:22

불법복제 및 배포금지

| REV | DATE | DESCRIPTION | DRAWN | CHECK | APPRVD |
|---|---|---|---|---|---|
| A | 20.JAN.2021 | REDRAWING | K.H.Han | - | - |

TITLE

HOISTING CONTROL BOX LAY-OUT

KDV5-M

CUSTOMER

극동호이스트 주식회사
KUKDONG HOIST CO., LTD.

| DESIGN | SCALE | SHT. NO. | ORDER NO. |
|---|---|---|---|
| | | | |

DWG. NO.

KD5EB00

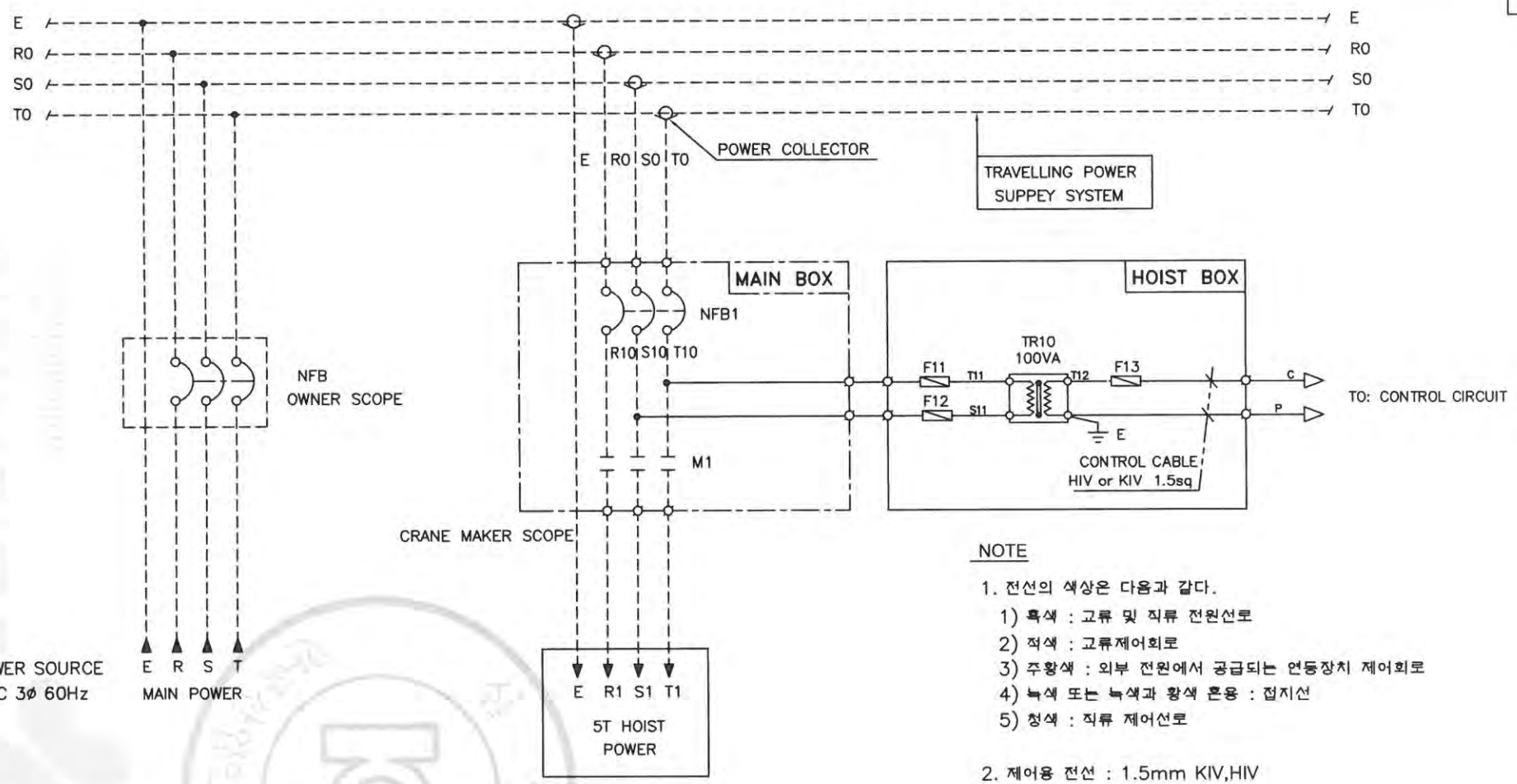


NOTE

1. 전선의 색상은 다음과 같다.
   1) 흑색 : 교류 및 직류 전원선로
   2) 적색 : 교류제어회로
   3) 주황색 : 외부 전원에서 공급되는 연동장치 제어회로
   4) 녹색 또는 녹색과 황색 혼용 : 접지선
   5) 청색 : 직류 제어선로
2. 제어용 전선 : 1.5mm KIV,HIV
3. 제작시 다소 변경 될수있음.
4. 외함 개방구조는 다음과 같을것.
   외함 개방후 충전되어있는 부분은 IP2X 이상의 직접 접촉 방호가 되어있을것.

| VOLTAGE | F11 F12 | F13 | MCCB100 | | TR10 | M1 |
|---|---|---|---|---|---|---|
| | | | 5.5KW x 6P | 4.2KW x 8P | | |
| 220V | 2A | 3A | 50AF/50AT | 50AF/50AT | 220/110,120V 100VA | DMC48b |
| 380V | 1A | 3A | 30AF/30AT | 30AF/30AT | 380/110,120V 100VA | DMC40b |
| 440V | 1A | 3A | 30AF/30AT | 30AF/30AT | 440/110,120V 100VA | DMC40b |
| 460V | 1A | 3A | 30AF/30AT | 30AF/30AT | 460/110,120V 100VA | DMC40b |
| 480V | 1A | 3A | 30AF/30AT | 30AF/30AT | 480/110,120V 100VA | DMC40b |

| REV | DATE | DESCRIPTION | DRAWN | CHECK | APPRVD |
|---|---|---|---|---|---|
| A | 20.JAN.2021 | REDRAWING | K.H.Han | - | - |

TITLE: MAIN POWER CIRCUIT DIAGRAM
KDV5-M

CUSTOMER

극동호이스트 주식회사
KUKDONG HOIST CO., LTD.

| DESIGN | SCALE | SHT. NO. | ORDER NO. |
|---|---|---|---|
| | | | |

DWG. NO. KD5-E000

ADR'S NO.

192.168.11.51 / 2021-02-05 15:49:22

불법복제 및 배포금지

| 1 | 2 | 3 | 4 | 5 | 6 | 7 | 8 | 9 | 10 | 11 | 12 | 13 | 14 | 15 | 16 | 17 | 18 | 19 | 20 |
|---|---|---|---|---|---|---|---|---|---|---|---|---|---|---|---|---|---|---|---|

ADR'S NO.

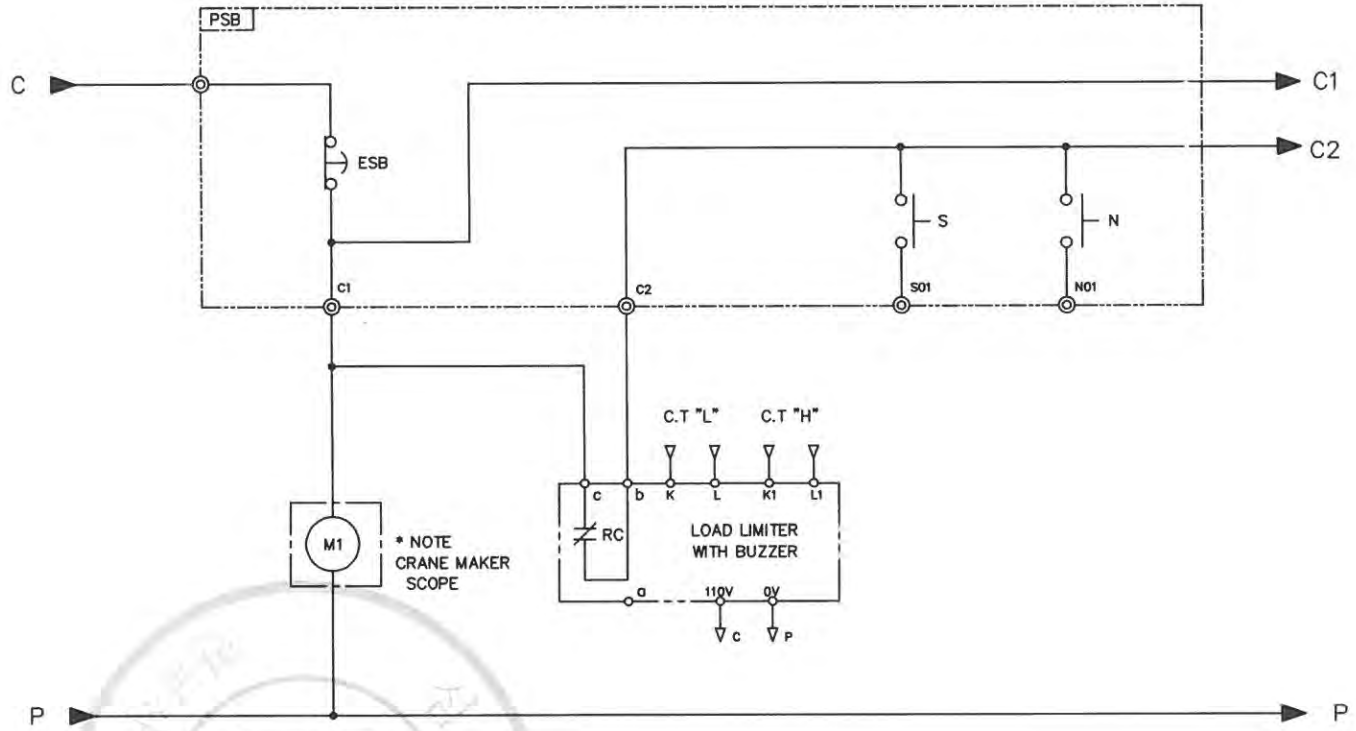


| SPECIFICATION / SYMBOLS / DESCRIPTION | | PENDANT SWITCH BUTTON |
|---|---|---|
| | | PSB |
| | AC 3PH 220,380,440, 460,480V 60Hz | KG-H06EAAA |
| | | KG-H06EAAA |
| SELECTION / MAKER | KUK DONG HOIST | KG AUTO |

| REV | DATE | DESCRIPTION | DRAWN | CHECK | APPRVD |
|---|---|---|---|---|---|
| A | 20.JAN.2021 | REDRAWING | K.H.Han | - | - |

TITLE
CONTROL CIRCUIT (MAIN & TRAVELLING)
KDV5-M

CUSTOMER

극동호이스트 주식회사
KUKDONG HOIST CO., LTD.

| DESIGN | SCALE | SHT. NO. | ORDER NO. |
|---|---|---|---|
| | | | |

DWG. NO.
KD5-E21

192.168.11.51 / 2021-02-05 15:49:22
무단배포 및 복제 금지

불법복제 및 배포금지

# SINGLE SPEED

192.168.11.51 / 2021-02-05 15:49:22

| 1 | 2 | 3 | 4 | 5 | 6 | 7 | 8 | 9 | 10 | 11 | 12 | 13 | 14 | 15 | 16 | 17 | 18 | 19 | 20 |
|---|---|---|---|---|---|---|---|---|---|---|---|---|---|---|---|---|---|---|---|

ADR'S NO.

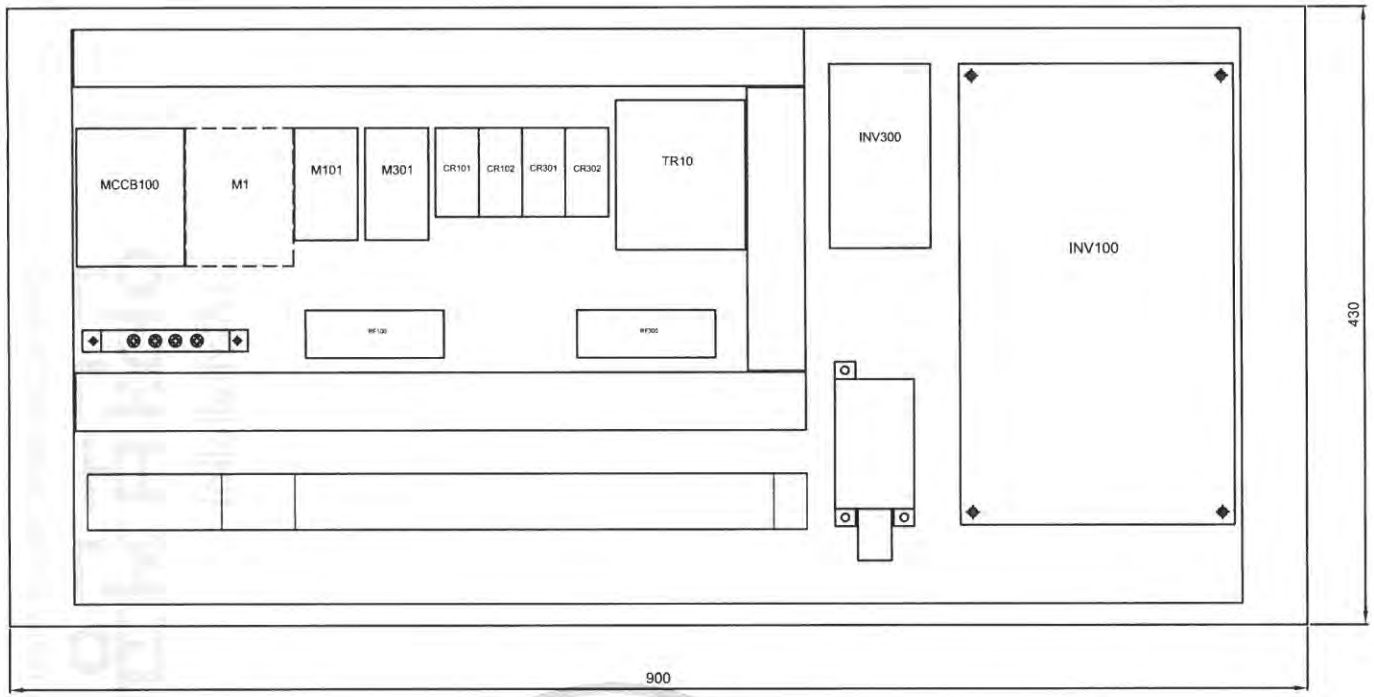


| NO | SYMBOL | SPECIFICATION | Q'TY | REMARK |
|---|---|---|---|---|
| 1 | MCCB100 | 50AF/50AT | 1 | |
| 2 | M1 | DMC48b | 1 | CRANE SCOPE |
| 3 | M101 | DMC22b | 1 | HOISTING |
| 4 | M301 | DMC22b | 1 | TRAVERSING |
| 5 | CR101,CR102 | MINI 4a4b | 2 | HOISTING |
| 6 | CR301,CR302 | MINI 4a4b | 2 | TRAVERSING |
| 7 | TR10 | 220/110,120V 100VA | 1 | |
| 8 | RF100 | BK-060J1 | 1 | HOISTING |
| 9 | RF300 | BK-060J1 | 1 | TRAVERSING |
| 10 | INV100 | HIGH : VFD110CH23A-21<br>LOW : VFD075CH23A-21 | 1 | HOISTING |
| 11 | INV300 | 1DRIVE : SV008iG5A-2<br>2DRIVE : SV015iG5A-2 | 1 | TRAVERSING |

불법복제 및 배포금지

192.168.11.51 / 2021-02-05 15:49:22

NOTE

1. UPPER LIMIT LS-1,LS-2의 접점 허용 전류 용량. : AC 600V, 75A
2. POWER SOURCE : AC. 3ø 220V 60HZ
3. EARTH TERMINAL RESISTANCE : 0.018 Ω

: CRANE SCOPE

NOTE

1. 전선의 색상은 다음과 같다.
   1) 흑색 : 고류 및 직류 전원선로
   2) 적색 : 고류제어회로
   3) 주황색 : 외부 전원에서 공급되는 연동장치 제어회로
   4) 녹색 또는 녹색과 황색 혼용 : 접지선
   5) 청색 : 직류 제어선로
2. CABLE MATERIAL : KIV OR EQUIVALENT / MIN SIZE : 1.5sq
3. 제어용 전선 : 1.5mm KIV,HIV
4. 제작시 다소 변경 될수있음.
5. 외함 개방구조는 다음과 같을것.
   1) 외함 개방시 충전부분이 차단되도록 할것.
   2) 외함 개방후 충전되어있는 부분은 IP2X 이상의 직접 접촉 방호가 되어있을것.

| REV | DATE | DESCRIPTION | DRAWN | CHECK | APPRVD |
|---|---|---|---|---|---|
| A | 20.JAN.2021 | REDRAWING | K.H.Han | - | - |

TITLE: PANEL LAYOUT KDV5-M

CUSTOMER

극동호이스트 주식회사 KUKDONG HOIST CO., LTD.

| DESIGN | SCALE | SHT. NO. | ORDER NO. |
|---|---|---|---|
| | | | |

DWG. NO. KD5-BS21

ADR'S NO.

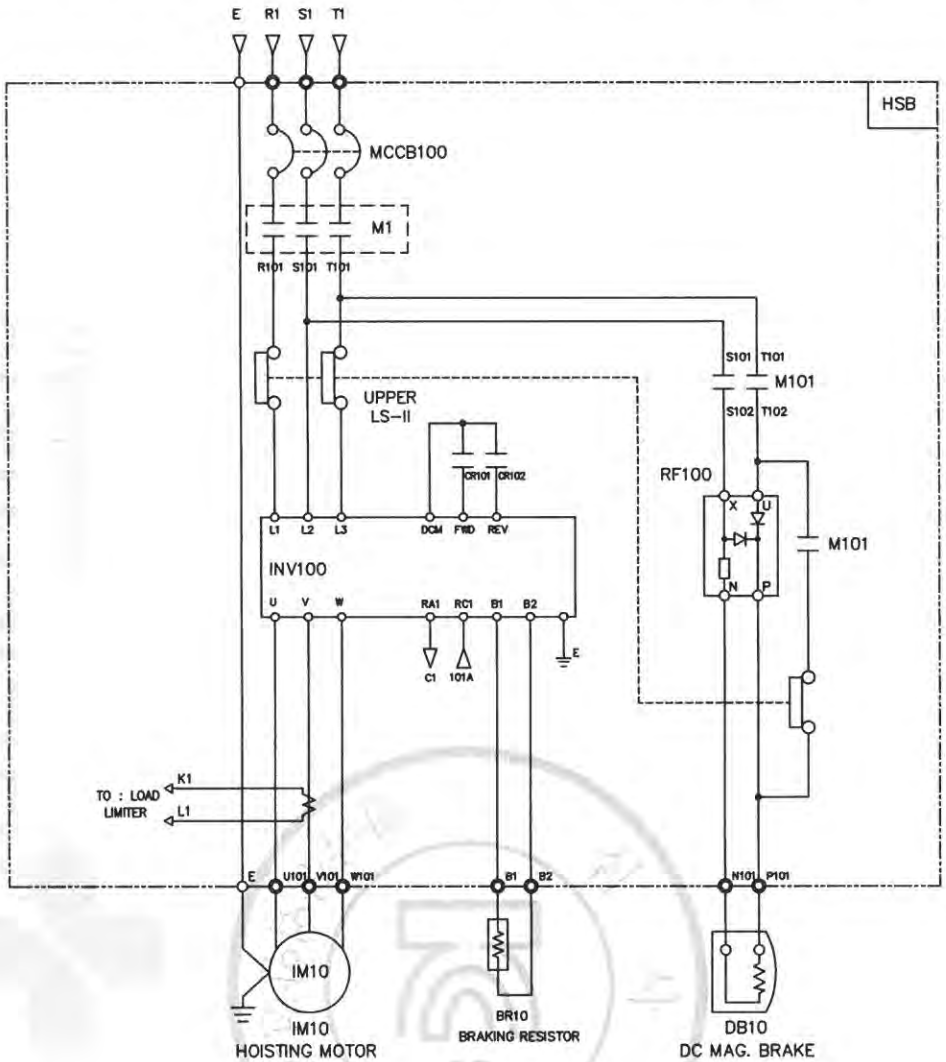


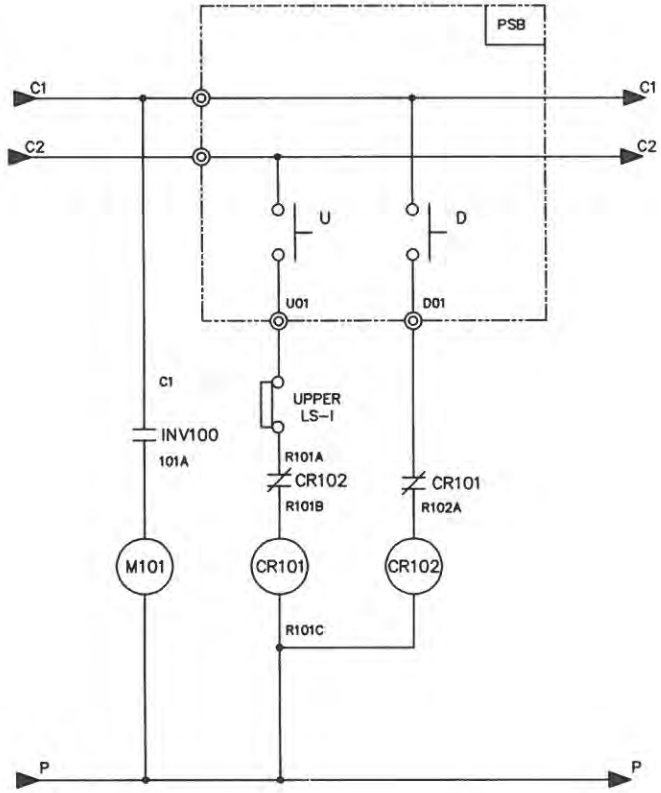


: CRANE SCOPE

| SPECIFICATION / SYMBOLS / DESCRIPTION | HOISTING POWER | HOISTING MOTOR | DC.MAG' BRAKE | BRAKE MAGNET | MOLDED CASE CIRCUIT BREAKER | CONTROL RELAY | LOAD LIMITER | BRAKING RESISTOR | INVERTER | SILICON RECTIFIER | UPPER LIMIT |
|---|---|---|---|---|---|---|---|---|---|---|---|
| | | IM 10 | DB10 | M101 | MCCB100 | CR101,102 | LOAD LIMITER | BR10 | INV100 | RF100 | LS-I,II |
| | AC 3PH 220V 60Hz | 5.5kW x 6P | DC 100V | DMC22b | 50AF/50AT | MINI 4a4b | JDL-100 | 4kW, 11ohm | VFD110CH23A-21 | BK-060J1 | 600V 75A |
| | | 4.2kW x 8P | DC 100V | DMC22b | 50AF/50AT | MINI 4a4b | JDL-100 | 3kW, 18ohm | VFD075CH23A-21 | BK-060J1 | 600V 75A |
| SELECTION / MAKER | KUK DONG HOIST | | | DONG A | LS | | JUNG HO | DELTA | DELTA | BO KUK | KUK DONG |

| REV | DATE | DESCRIPTION | DRAWN | CHECK | APPRVD |
|---|---|---|---|---|---|
| A | 20.JAN.2021 | REDRAWING | K.H.Han | - | - |

TITLE
HOISTING CIRCUIT DIAGRAM
KDV5-M

CUSTOMER

극동호이스트 주식회사
KUKDONG HOIST CO., LTD.

| DESIGN | SCALE | SHT. NO. | ORDER NO. |
|---|---|---|---|
| | | | |

DWG. NO.
KD5-ES21

192.168.11.51 / 2021-02-05 15:49:22

불법복제 및 배포금지

ADR'S NO.

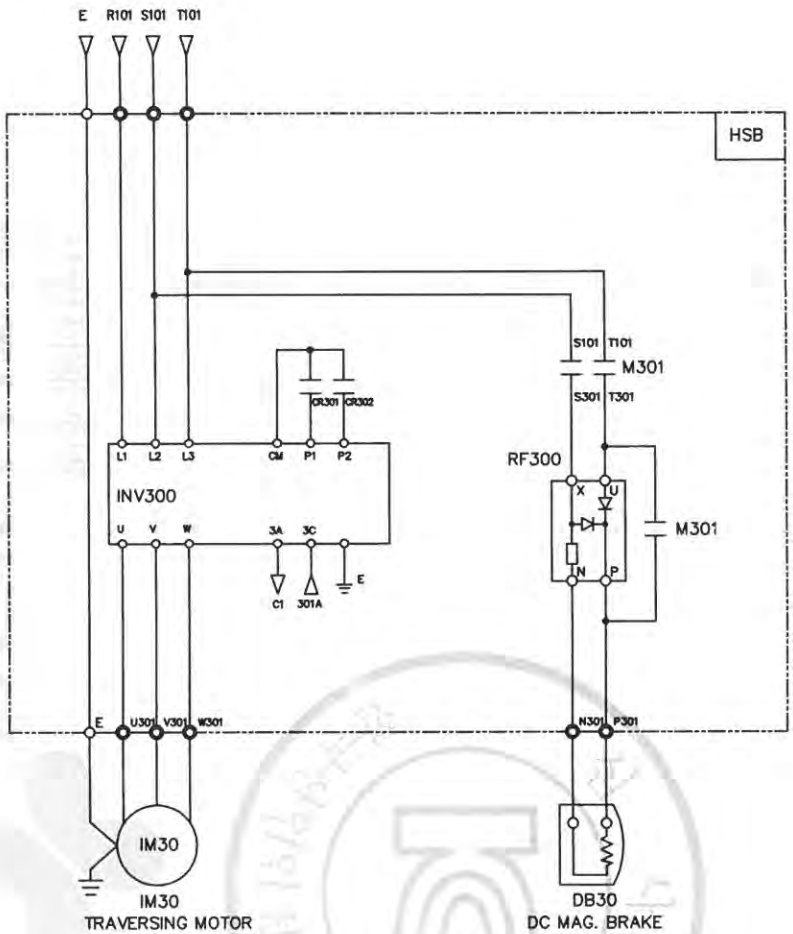


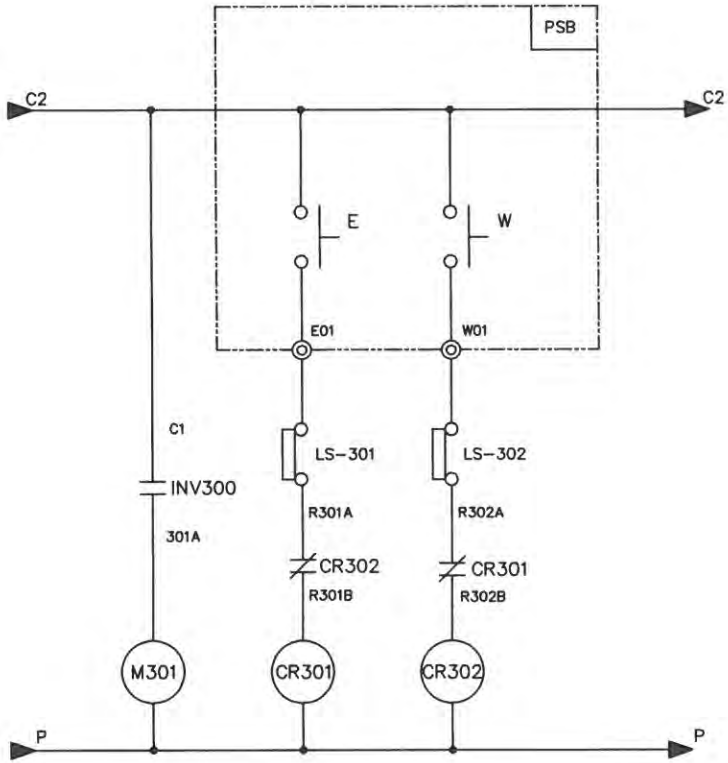


| SPECIFICATION / SYMBOLS / DESCRIPTION | TRAVERSING POWER | TRAVERSING MOTOR | DC.MAG' BRAKE | BRAKE MAGNET | CONTROL RELAY | INVERTER | SILICON RECTIFIER | LIMIT SWITCH |
|---|---|---|---|---|---|---|---|---|
| | | IM 30 | DB30 | M301 | CR301,302 | INV300 | RF300 | LS-301,302 |
| | AC 3PH 220V 60Hz | 0.75kW x 4P | DC 100V | DMC22b | MINI 4a4b | SV008iG5A-2 | BK-060J1 | KG-L001 |
| | | 0.5kW x 6P | DC 100V | DMC22b | MINI 4a4b | SV008iG5A-2 | BK-060J1 | KG-L001 |
| SELECTION MAKER | KUK DONG HOIST | | | DONG A | | LS | BO KUK | KG AUTO |

| REV | DATE | DESCRIPTION | DRAWN | CHECK | APPRVD |
|---|---|---|---|---|---|
| A | 20.JAN.2021 | REDRAWING | K.H.Han | - | - |

TITLE
TRAVERSING CIRCUIT DIAGRAM
KDV5-M

CUSTOMER

극동호이스트 주식회사
KUKDONG HOIST CO., LTD.

| DESIGN | SCALE | SHT. NO. | ORDER NO. |
|---|---|---|---|
| | | | |

DWG. NO.
KD5-ES22

192.168.11.51 / 2021-02-05 15:49:22

불법복제 및 배포금지

ADR'S NO.

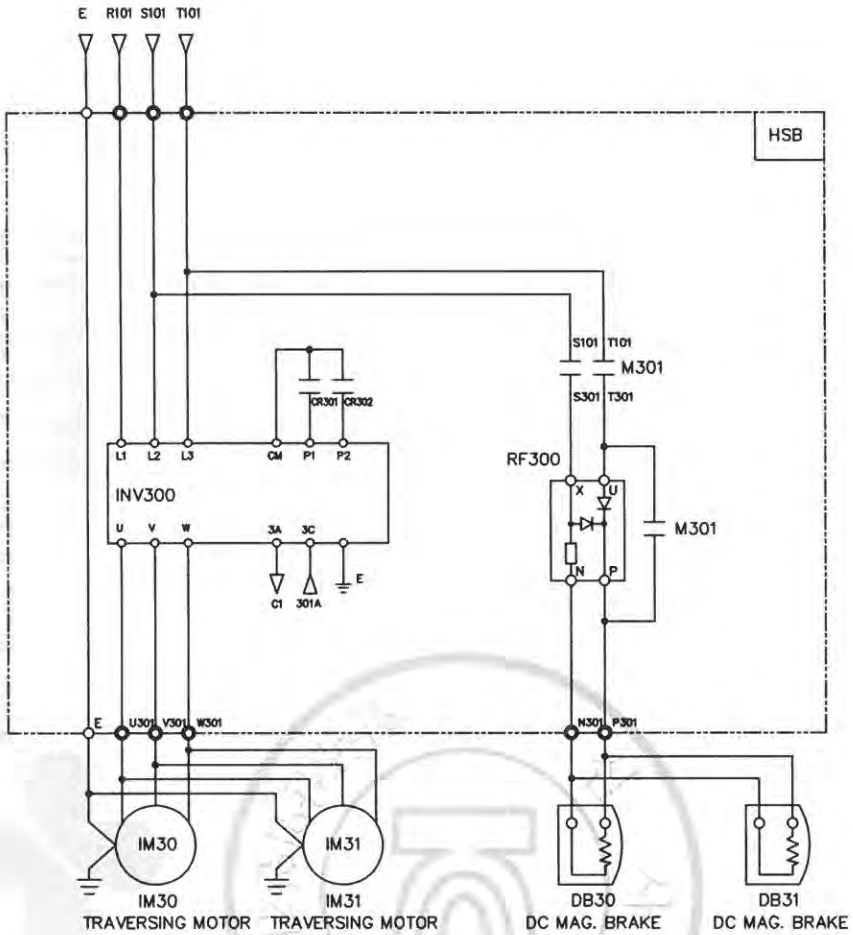


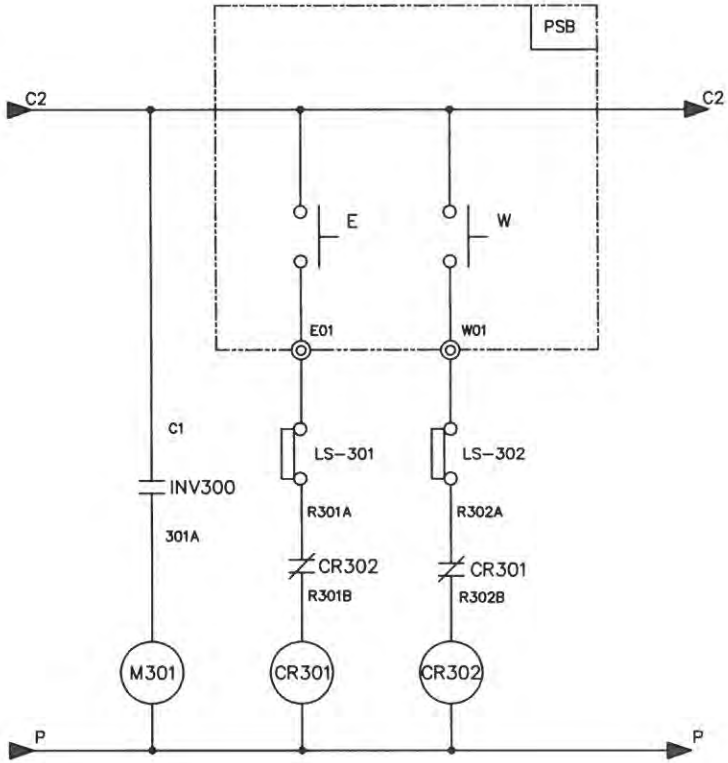


| SPECIFICATION / SYMBOLS / DESCRIPTION | TRAVERSING POWER | TRAVERSING MOTOR | DC.MAG' BRAKE | BRAKE MAGNET | CONTROL RELAY | INVERTER | SILICON RECTIFIER | LIMIT SWITCH |
|---|---|---|---|---|---|---|---|---|
| | | IM 30,31 | DB30,31 | M301 | CR301,302 | INV300 | RF300 | LS-301,302 |
| | AC 3PH 220V 60Hz | 0.75kW x 4P | DC 100V | DMC22b | MINI 4a4b | SV015iG5A-2 | BK-060J1 | KG-L001 |
| | | 0.5kW x 6P | DC 100V | DMC22b | MINI 4a4b | SV015iG5A-2 | BK-060J1 | KG-L001 |
| SELECTION / MAKER | KUK DONG HOIST | | | DONG A | | LS | BO KUK | KG AUTO |

| REV | DATE | DESCRIPTION | DRAWN | CHECK | APPRVD |
|---|---|---|---|---|---|
| A | 20.JAN.2021 | REDRAWING | K.H.Han | - | - |

TITLE
TRAVERSING CIRCUIT DIAGRAM
KDV5-M

CUSTOMER

극동호이스트 주식회사
KUKDONG HOIST CO., LTD.

| DESIGN | SCALE | SHT. NO. | ORDER NO. |
|---|---|---|---|
| | | | |

DWG. NO.
KD5-ES23

192.168.11.51 / 2021-02-05 15:49:22

불법복제 및 배포금지

| 1 | 2 | 3 | 4 | 5 | 6 | 7 | 8 | 9 | 10 | 11 | 12 | 13 | 14 | 15 | 16 | 17 | 18 | 19 | 20 |
|---|---|---|---|---|---|---|---|---|---|---|---|---|---|---|---|---|---|---|---|

ADR'S NO.

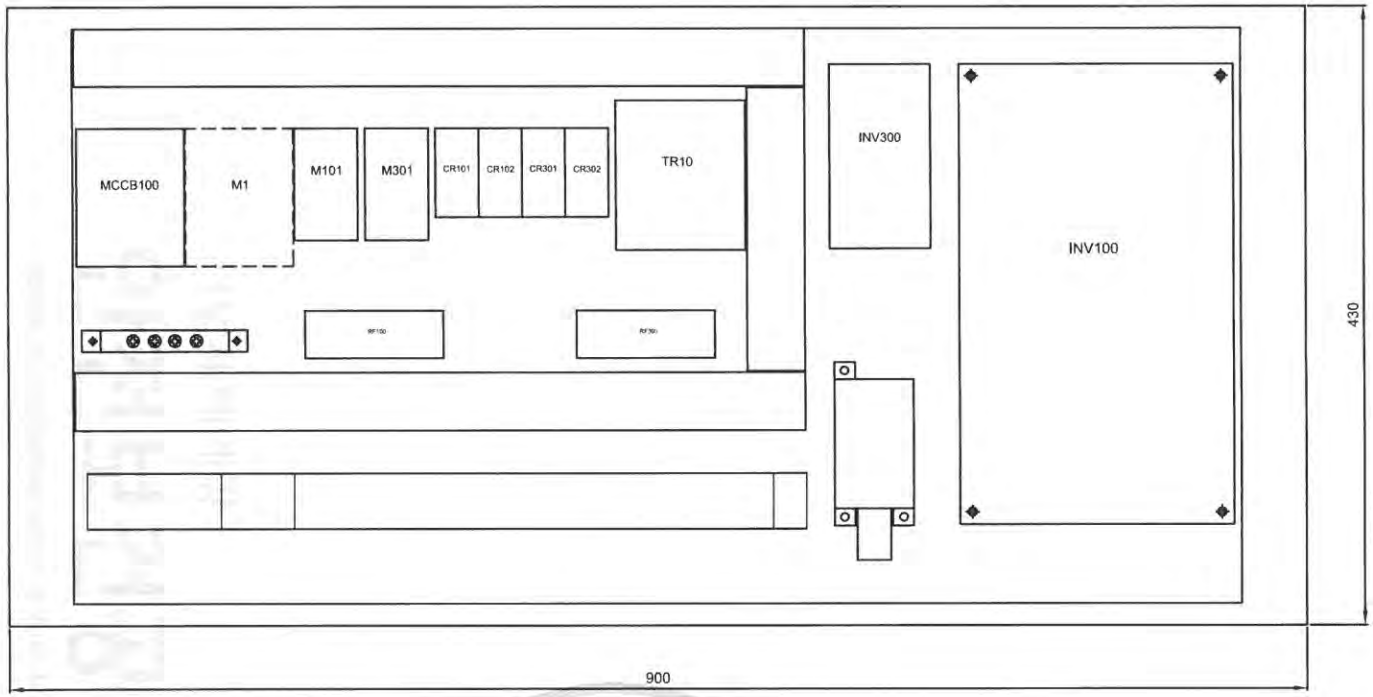


| NO | SYMBOL | SPECIFICATION | Q'TY | REMARK |
|---|---|---|---|---|
| 1 | MCCB100 | 30AF/30AT | 1 | |
| 2 | M1 | DMC40b | 1 | CRANE SCOPE |
| 3 | M101 | DMC22b | 1 | HOISTING |
| 4 | M301 | DMC22b | 1 | TRAVERSING |
| 5 | CR101,CR102 | MINI 4a4b | 2 | HOISTING |
| 6 | CR301,CR302 | MINI 4a4b | 2 | TRAVERSING |
| 7 | TR10 | 380,440,460,480V /110,120V 100VA | 1 | |
| 8 | FF100 | BK-060J1 | 1 | HOISTING |
| 9 | FF300 | BK-060J1 | 1 | TRAVERSING |
| 10 | INV100 | HIGH : VFD110CH43A-21<br>LOW : VFD075CH43A-21 | 1 | HOISTING |
| 11 | INV300 | 1DRIVE : SV008iG5A-4<br>2DRIVE : SV015iG5A-4 | 1 | TRAVERSING |

192.168.11.51 / 2021-02-05 15:49:22

불법복제 및 배포금지

N O T E

1. UPPER LIMIT LS-1,LS-2의 접점 허용 전류 용량. : AC 600V, 75A
2. POWER SOURCE : AC. 3ø 380,440,460,480V 60HZ
3. EARTH TERMINAL RESISTANCE : 0.018 Ω

: CRANE SCOPE

NOTE

1. 전선의 색상은 다음과 같다.
   1) 흑색 : 교류 및 직류 전원선로
   2) 적색 : 교류제어회로
   3) 주황색 : 외부 전원에서 공급되는 연동장치 제어회로
   4) 녹색 또는 녹색과 황색 혼용 : 접지선
   5) 청색 : 직류 제어선로
2. CABLE MATERIAL : KIV OR EQUIVALENT, MIN SIZE : 1.5sq
3. 제어용 전선 : 1.5mm KIV,HIV
4. 제작시 다소 변경 될수있음.
5. 외함 개방구조는 다음과 같을것.
   1) 외함 개방시 충전부분이 차단되도록 할것.
   2) 외함 개방후 충전되어있는 부분은 IP2X 이상의 직접 접촉 방호가 되어있을것.

| REV | DATE | DESCRIPTION | DRAWN | CHECK | APPRVD |
|---|---|---|---|---|---|
| A | 20.JAN.2021 | REDRAWING | K.H.Han | - | - |

TITLE: PANEL LAYOUT KDV5-M

CUSTOMER

극동호이스트 주식회사 KUKDONG HOIST CO., LTD.

| DESIGN | SCALE | SHT. NO. | ORDER NO. |
|---|---|---|---|
| | | | |

DWG. NO. KD5-BS31

ADR'S NO.

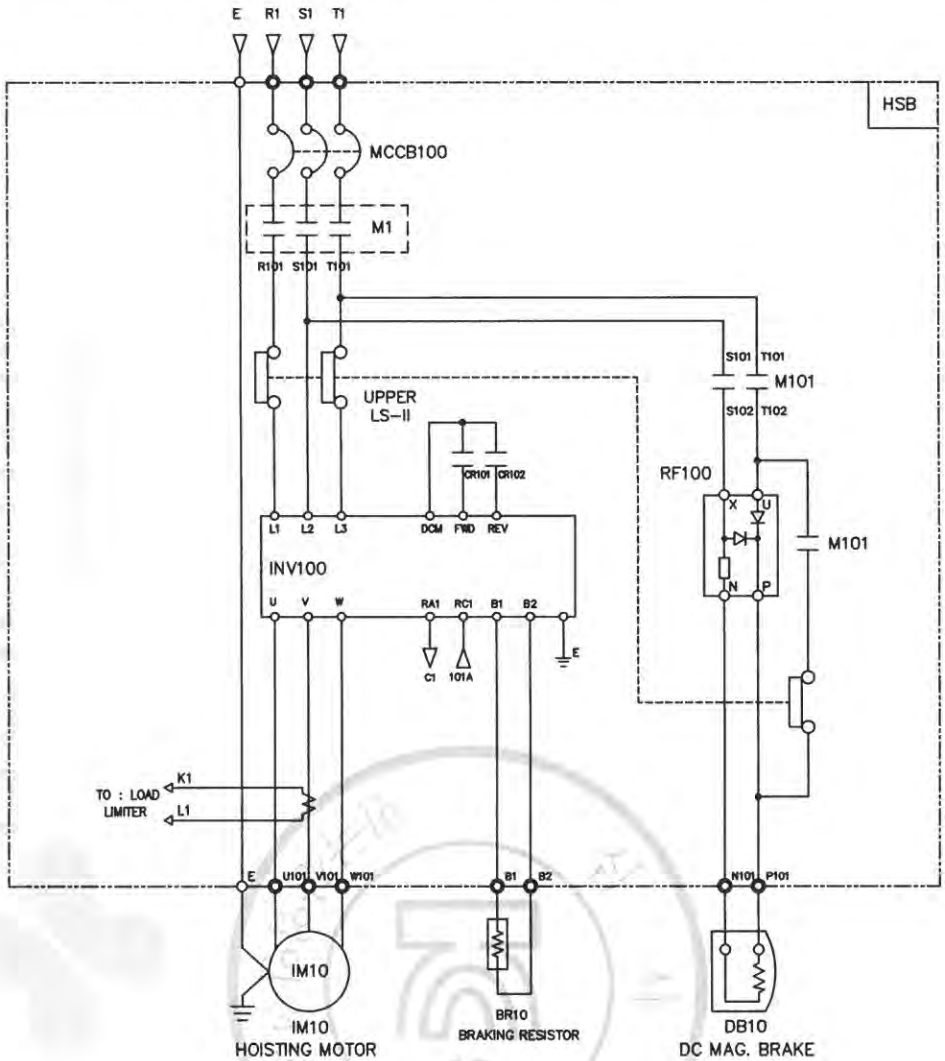


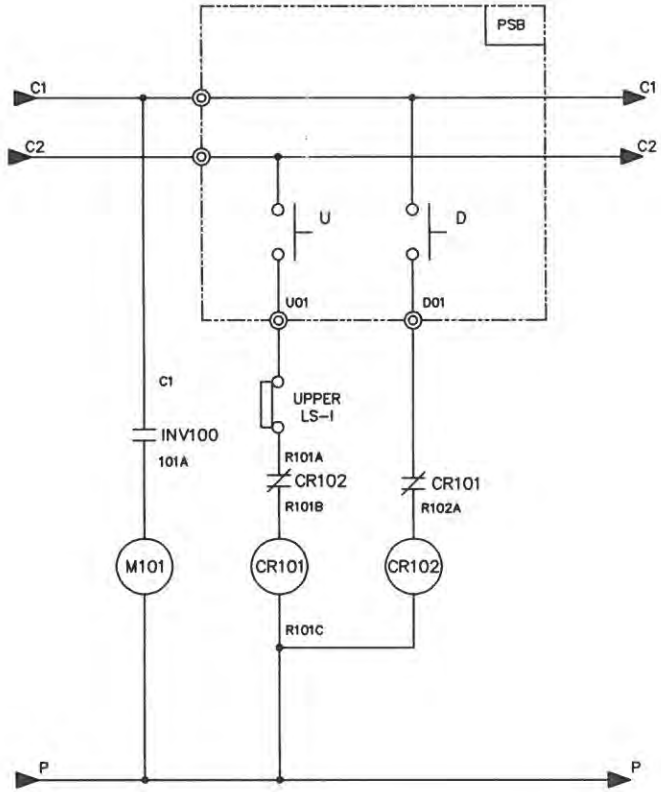


: CRANE SCOPE

| SPECIFICATION / SYMBOLS / DESCRIPTION | HOISTING POWER | HOISTING MOTOR | DC.MAG' BRAKE | BRAKE MAGNET | MOLDED CASE CIRCUIT BREAKER | CONTROL RELAY | LOAD LIMITER | BRAKING RESISTOR | INVERTER | SILICON RECTIFIER | UPPER LIMIT |
|---|---|---|---|---|---|---|---|---|---|---|---|
| | | IM 10 | DB10 | M101 | MCCB100 | CR101,102 | LOAD LIMITER | BR10 | INV100 | RF100 | LS-I,II |
| | AC 3PH 380,440 460,480V 60Hz | 5.5kW x 6P | DC 100V | DMC22b | 30AF/30AT | MINI 4a4b | JDL-100 | 4kW, 43ohm | VFD110CH43A-21 | BK-060J1 | 600V 75A |
| | | 4.2kW x 8P | DC 100V | DMC22b | 30AF/30AT | MINI 4a4b | JDL-100 | 3kW, 75ohm | VFD075CH43A-21 | BK-060J1 | 600V 75A |
| SELECTION / MAKER | KUK DONG HOIST | | | DONG A | LS | | JUNG HO | DELTA | DELTA | BO KUK | KUK DONG |

| REV | DATE | DESCRIPTION | DRAWN | CHECK | APPRVD |
|---|---|---|---|---|---|
| A | 20.JAN.2021 | REDRAWING | K.H.Han | - | - |

TITLE
HOISTING CIRCUIT DIAGRAM
KDV5-M

CUSTOMER

극동호이스트 주식회사
KUKDONG HOIST CO., LTD.

| DESIGN | SCALE | SHT. NO. | ORDER NO. |
|---|---|---|---|
| | | | |

DWG. NO.
KD5-ES31

192.168.11.51 / 2021-02-05 15:49:22

불법복제 및 배포금지

| 1 | 2 | 3 | 4 | 5 | 6 | 7 | 8 | 9 | 10 | 11 | 12 | 13 | 14 | 15 | 16 | 17 | 18 | 19 | 20 |
|---|---|---|---|---|---|---|---|---|---|---|---|---|---|---|---|---|---|---|---|

ADR'S NO.

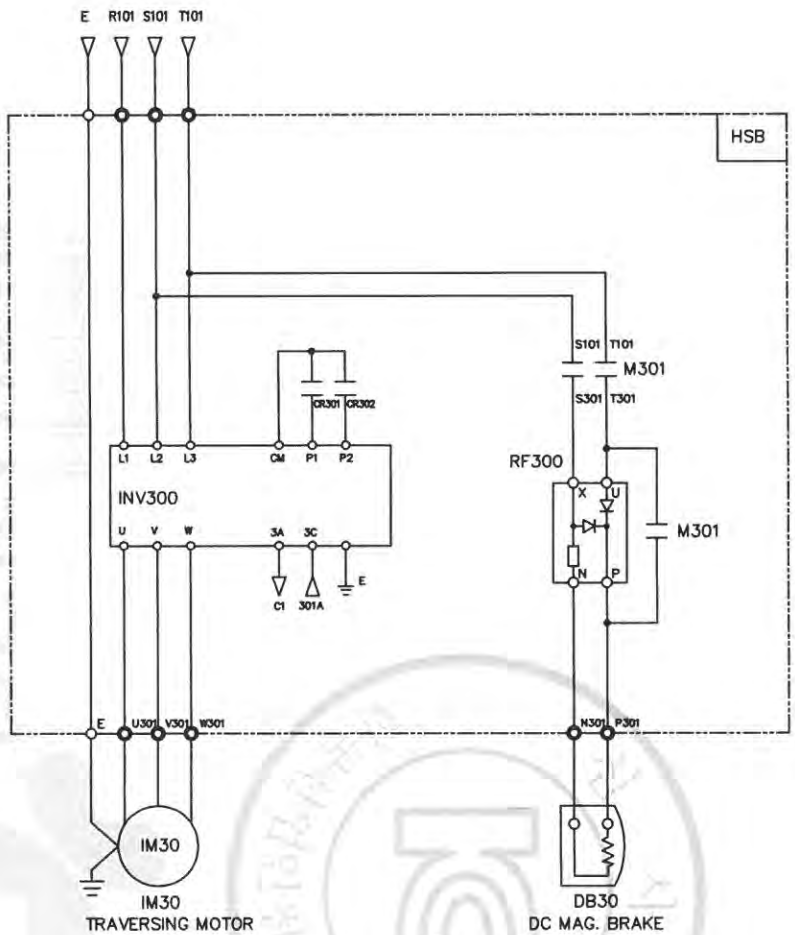


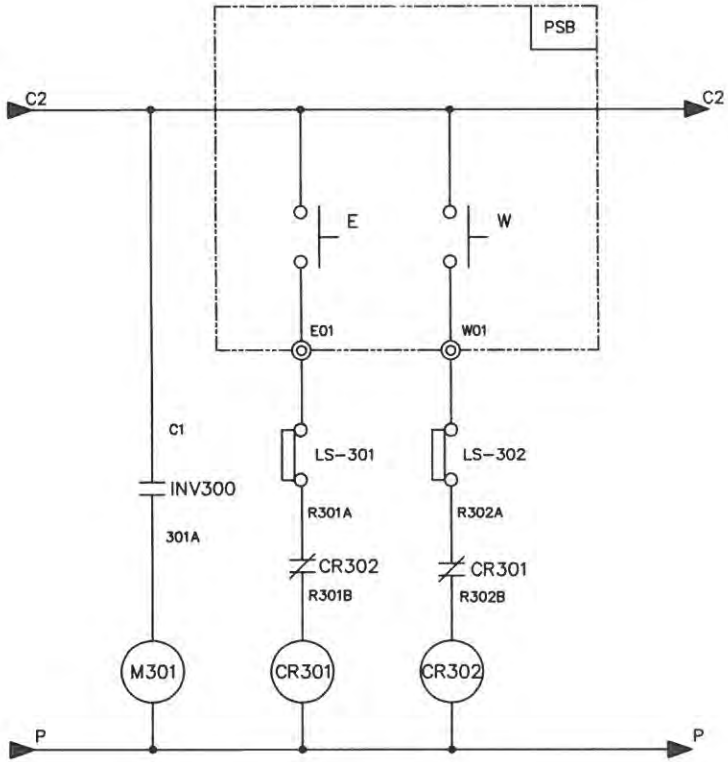


| SPECIFICATION / SYMBOLS / DESCRIPTION | TRAVERSING POWER | TRAVERSING MOTOR | DC.MAG' BRAKE | BRAKE MAGNET | CONTROL RELAY | INVERTER | SILICON RECTIFIER | LIMIT SWITCH |
|---|---|---|---|---|---|---|---|---|
| | | IM 30 | DB30 | M301 | CR301,302 | INV300 | RF300 | LS-301,302 |
| | AC 3PH 380,440 460,480V 60Hz | 0.75kW x 4P | DC 100V | DMC22b | MINI 4a4b | SV008iG5A-4 | BK-060J1 | KG-L001 |
| | | 0.5kW x 6P | DC 100V | DMC22b | MINI 4a4b | SV008iG5A-4 | BK-060J1 | KG-L001 |
| SELECTION / MAKER | KUK DONG HOIST | | | DONG A | | LS | BO KUK | KG AUTO |

| REV | DATE | DESCRIPTION | DRAWN | CHECK | APPRVD |
|---|---|---|---|---|---|
| A | 20.JAN.2021 | REDRAWING | K.H.Han | - | - |

TITLE

TRAVERSING CIRCUIT DIAGRAM

KDV5-M

CUSTOMER

극동호이스트 주식회사
KUKDONG HOIST CO., LTD.

| DESIGN | SCALE | SHT. NO. | ORDER NO. |
|---|---|---|---|
| | | | |

DWG. NO.

KD5-ES32

192.168.11.51 / 2021-02-05 15:49:22

불법복제 및 배포금지

ADR'S NO.

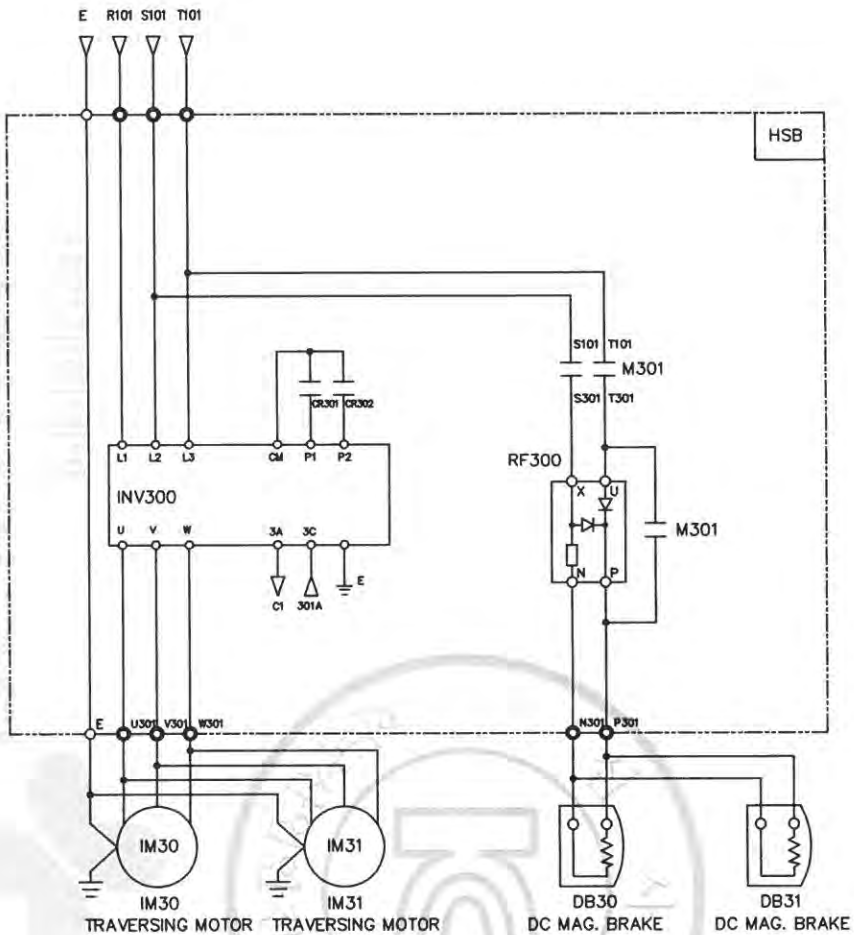


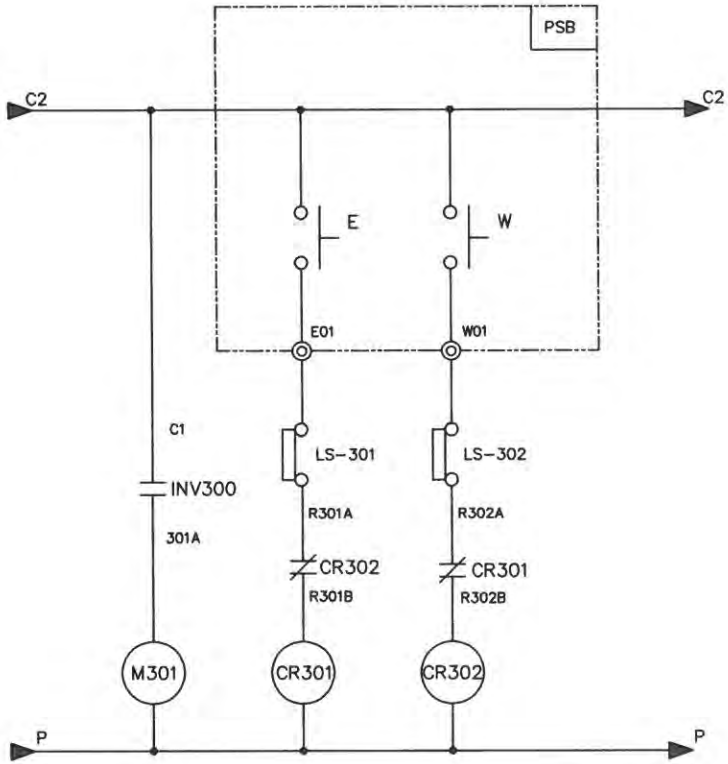


| SPECIFICATION / SYMBOLS / DESCRIPTION | TRAVERSING POWER | TRAVERSING MOTOR | DC.MAG' BRAKE | BRAKE MAGNET | CONTROL RELAY | INVERTER | SILICON RECTIFIER | LIMIT SWITCH |
|---|---|---|---|---|---|---|---|---|
| | | IM 30,31 | DB30,31 | M301 | CR301,302 | INV300 | RF300 | LS-301,302 |
| | AC 3PH 380,440 460,480V 60Hz | 0.75kW x 4P | DC 100V | DMC22b | MINI 4a4b | SV015iG5A-4 | BK-060J1 | KG-L001 |
| | | 0.5kW x 6P | DC 100V | DMC22b | MINI 4a4b | SV015iG5A-4 | BK-060J1 | KG-L001 |
| SELECTION MAKER | KUK DONG HOIST | | | DONG A | | LS | BO KUK | KG AUTO |

| REV | DATE | DESCRIPTION | DRAWN | CHECK | APPRVD |
|---|---|---|---|---|---|
| A | 20.JAN.2021 | REDRAWING | K.H.Han | - | - |

TITLE
TRAVERSING CIRCUIT DIAGRAM
KDV5-M

CUSTOMER

극동호이스트 주식회사
KUKDONG HOIST CO., LTD.

| DESIGN | SCALE | SHT. NO. | ORDER NO. |
|---|---|---|---|
| | | | |

DWG. NO.
KD5-ES33

192.168.11.51 / 2021-02-05 15:49:22

무단복제 및 배포금지

불법복제 및 배포금지

# DOUBLE SPEED

192.168.11.51 / 2021-02-05 15:49:22

| 1 | 2 | 3 | 4 | 5 | 6 | 7 | 8 | 9 | 10 | 11 | 12 | 13 | 14 | 15 | 16 | 17 | 18 | 19 | 20 |
|---|---|---|---|---|---|---|---|---|---|---|---|---|---|---|---|---|---|---|---|

ADR'S NO.

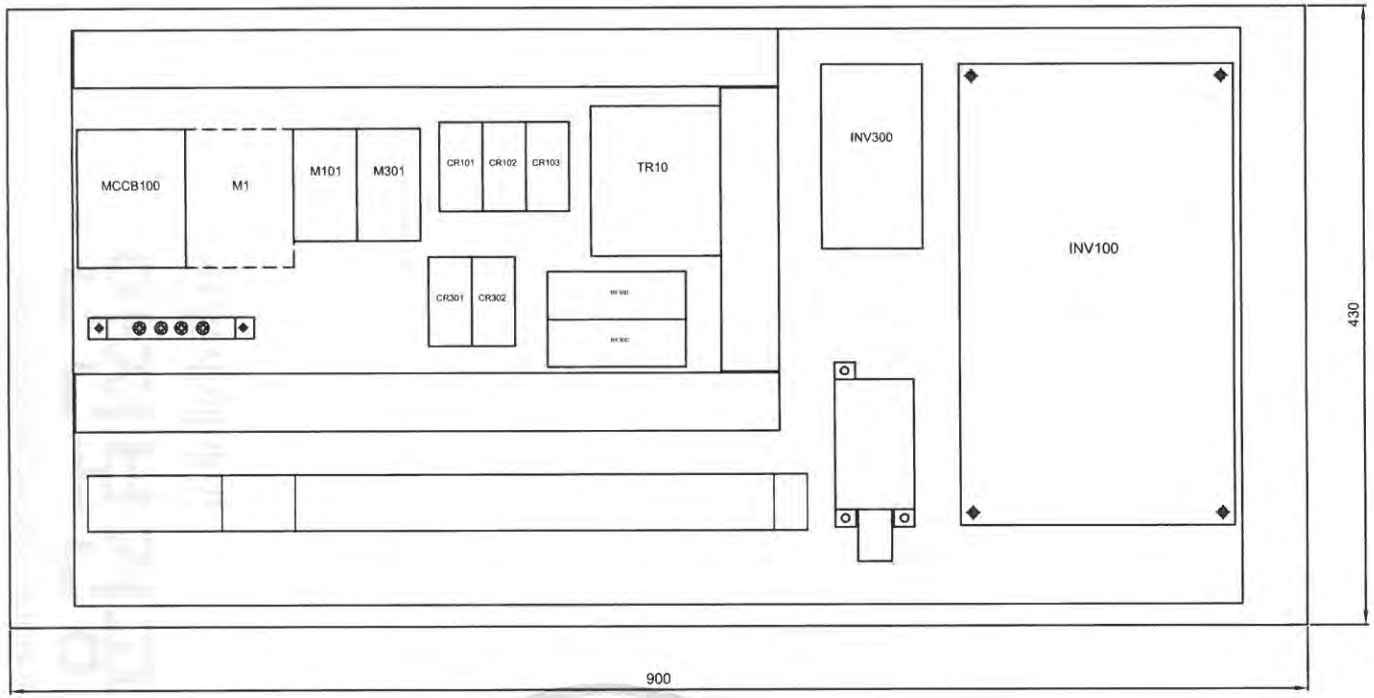


| NO | SYMBOL | SPECIFICATION | Q'TY | REMARK |
|---|---|---|---|---|
| 1 | MCCB100 | 50AF/50AT | 1 | |
| 2 | M1 | DMC48b | 1 | CRANE SCOPE |
| 3 | M101 | DMC22b | 1 | HOISTING |
| 4 | M301 | DMC22b | 1 | TRAVERSING |
| 5 | CR101,CR102,CR103 | MINI 4a4b | 2 | HOISTING |
| 6 | CR301,CR302 | MINI 4a4b | 2 | TRAVERSING |
| 7 | TR10 | 220/110,120V 100VA | 1 | |
| 8 | RF100 | BK-060J1 | 1 | HOISTING |
| 9 | RF300 | BK-060J1 | 1 | TRAVERSING |
| 10 | INV100 | HIGH : VFD110CH23A-21<br>LOW : VFD075CH23A-21 | 1 | HOISTING |
| 11 | INV300 | 1DRIVE : SV008iG5A-2<br>2DRIVE : SV015iG5A-2 | 1 | TRAVERSING |

192.168.11.51 / 2021-02-05 15:49:22

불법복제 및 배포금지

N O T E

1. UPPER LIMIT LS-1,LS-2의 접점 허용 전류 용량. : AC 600V, 75A
2. POWER SOURCE : AC. 3ø 220V 60HZ
3. EARTH TERMINAL RESISTANCE : 0.018 Ω

: CRANE SCOPE

NOTE

1. 전선의 색상은 다음과 같다.
   1) 흑색 : 교류 및 직류 전원선로
   2) 적색 : 교류제어회로
   3) 주황색 : 외부 전원에서 공급되는 연동장치 제어회로
   4) 녹색 또는 녹색과 황색 혼용 : 접지선
   5) 청색 : 직류 제어선로
2. CABLE MATERIAL : KIV OR EQUIVALENT / MIN SIZE : 1.5sq
3. 제어용 전선 : 1.5mm KIV,HIV
4. 제작시 다소 변경 될수있음.
5. 외함 개방구조는 다음과 같을것.
   1) 외함 개방시 충전부분이 차단되도록 할것.
   2) 외함 개방후 충전되어있는 부분은 IP2X 이상의 직접 접촉 방호가 되어있을것.

| REV | DATE | DESCRIPTION | DRAWN | CHECK | APPRVD |
|---|---|---|---|---|---|
| A | 20.JAN.2021 | REDRAWING | K.H.Han | - | - |

TITLE: PANEL LAYOUT KDV5-M

CUSTOMER

극동호이스트 주식회사 KUKDONG HOIST CO., LTD.

| DESIGN | SCALE | SHT. NO. | ORDER NO. |
|---|---|---|---|
| | | | |

DWG. NO. KD5-BD21

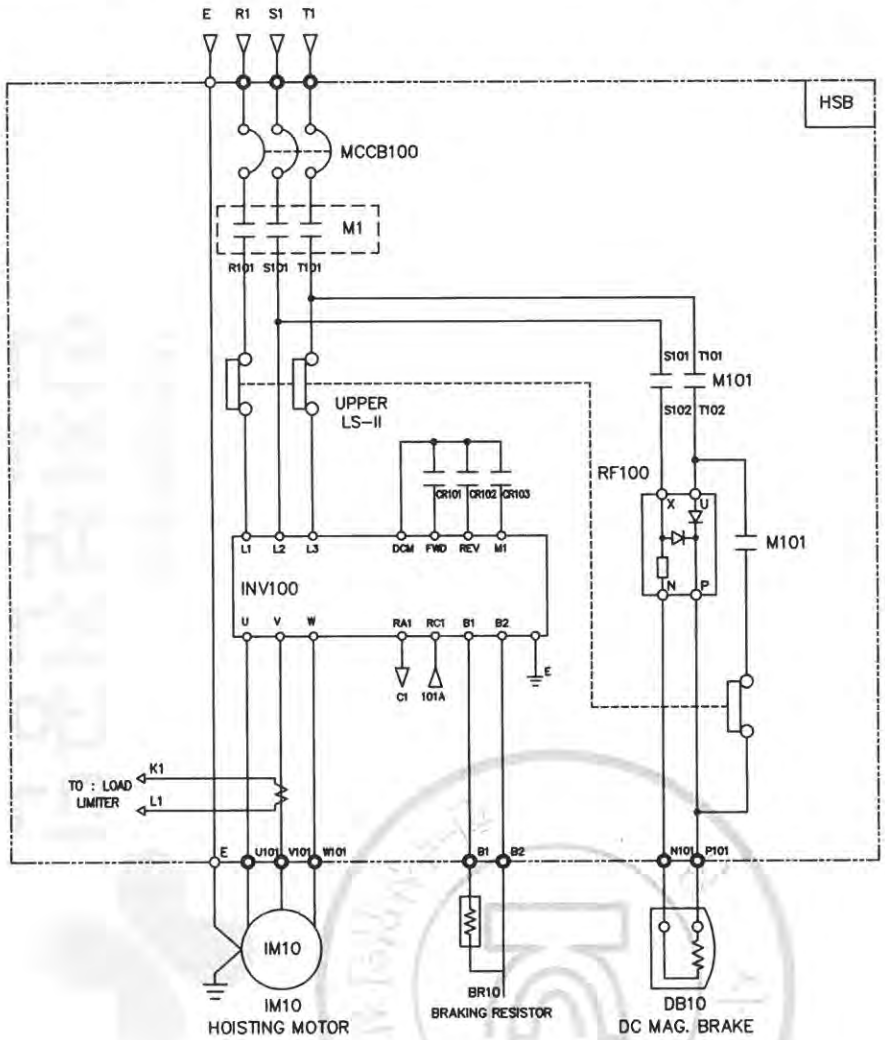


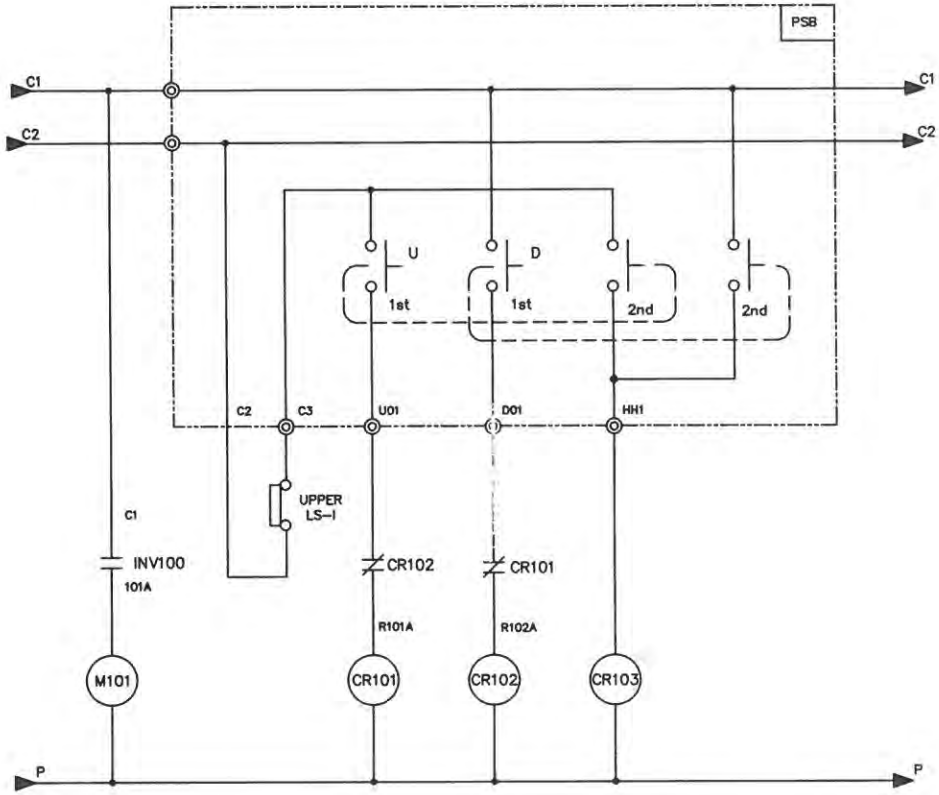


: CRANE SCOPE

| SPECIFICATION / SYMBOLS / DESCRIPTION | HOISTING POWER | HOISTING MOTOR | DC.MAG' BRAKE | BRAKE MAGNET | MOLDED CASE CIRCUIT BREAKER | CONTROL RELAY | LOAD LIMITER | BRAKING RESISTOR | INVERTER | SILICON RECTIFIER | UPPER LIMIT |
|---|---|---|---|---|---|---|---|---|---|---|---|
| | | IM 10 | DB10 | M101 | MCCB100 | CR101,102,103 | LOAD LIMITER | BR10 | INV100 | RF100 | LS-I,II |
| | AC 3PH 220V 60Hz | 5.5kW x 6P | DC 100V | DMC22b | 50AF/50AT | MINI 4a4b | JDL-100 | 4kW, 11ohm | VFD110CH23A-21 | BK-060J1 | 600V 75A |
| | | 4.2kW x 8P | DC 100V | DMC22b | 50AF/50AT | MINI 4a4b | JDL-100 | 3kW, 18ohm | VFD075CH23A-21 | BK-060J1 | 600V 75A |
| SELECTION / MAKER | KUK DONG HOIST | | | DONG A | LS | | JUNG HO | DELTA | DELTA | BO KUK | KUK DONG |

| REV | DATE | DESCRIPTION | DRAWN | CHECK | APPRVD |
|---|---|---|---|---|---|
| A | 20.JAN.2021 | REDRAWING | K.H.Han | - | - |

TITLE: HOISTING CIRCUIT DIAGRAM

KDV5-M

CUSTOMER

극동호이스트 주식회사
KUKDONG HOIST CO., LTD.

| DESIGN | SCALE | SHT. NO. | ORDER NO. |
|---|---|---|---|
| | | | |

DWG. NO. KD5-ED21

ADR'S NO.

불법복제 및 배포금지

192.168.11.51 / 2021-02-05 15:49:22

ADR'S NO.

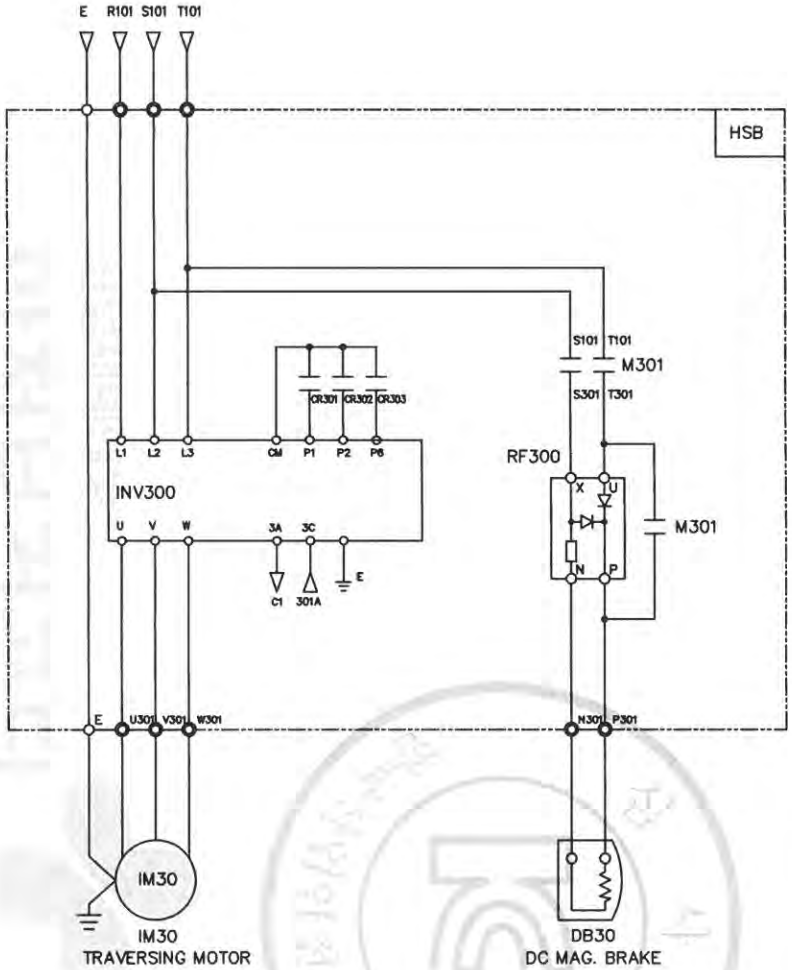


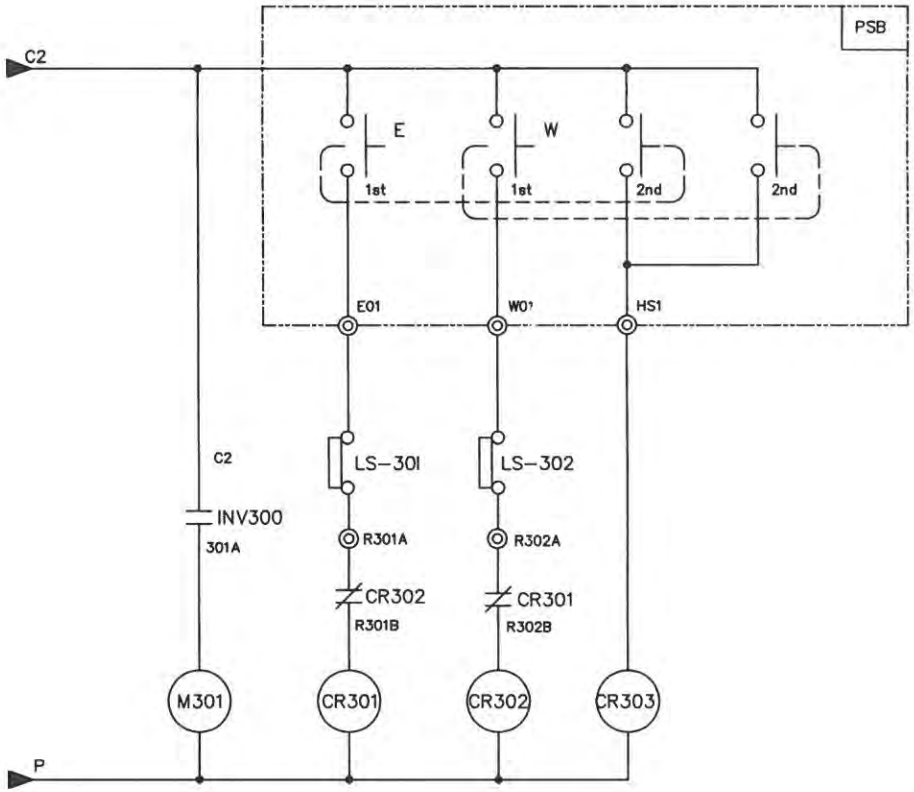


| SPECIFICATION / SYMBOLS / DESCRIPTION | TRAVERSING POWER | TRAVERSING MOTOR | DC.MAG' BRAKE | BRAKE MAGNET | CONTROL RELAY | INVERTER | SILICON RECTIFIER | LIMIT SWITCH |
|---|---|---|---|---|---|---|---|---|
| | | IM 30 | DB30 | M301 | CR301,302,303 | INV300 | RF300 | LS-301,302 |
| | AC 3PH 220V 60Hz | 0.75kW x 4P | DC 100V | DMC22b | MINI 4a4b | SV008iG5A-2 | BK-060J1 | KG-L001 |
| | | 0.5kW x 6P | DC 100V | DMC22b | MINI 4a4b | SV008iG5A-2 | BK-060J1 | KG-L001 |
| SELECTION / MAKER | KUK DONG HOIST | | | DONG A | | LS | BO KUK | KG AUTO |

| REV | DATE | DESCRIPTION | DRAWN | CHECK | APPRVD |
|---|---|---|---|---|---|
| A | 20.JAN.2021 | REDRAWING | K.H.Han | - | - |

TITLE
TRAVERSING CIRCUIT DIAGRAM
KDV5-M

CUSTOMER

극동호이스트 주식회사
KUKDONG HOIST CO., LTD.

| DESIGN | SCALE | SHT. NO. | ORDER NO. |
|---|---|---|---|
| | | | |

DWG. NO.
KD5-ED22

192.168.11.51 / 2021-02-05 15:49:22

불법복제 및 배포금지

ADR'S NO.

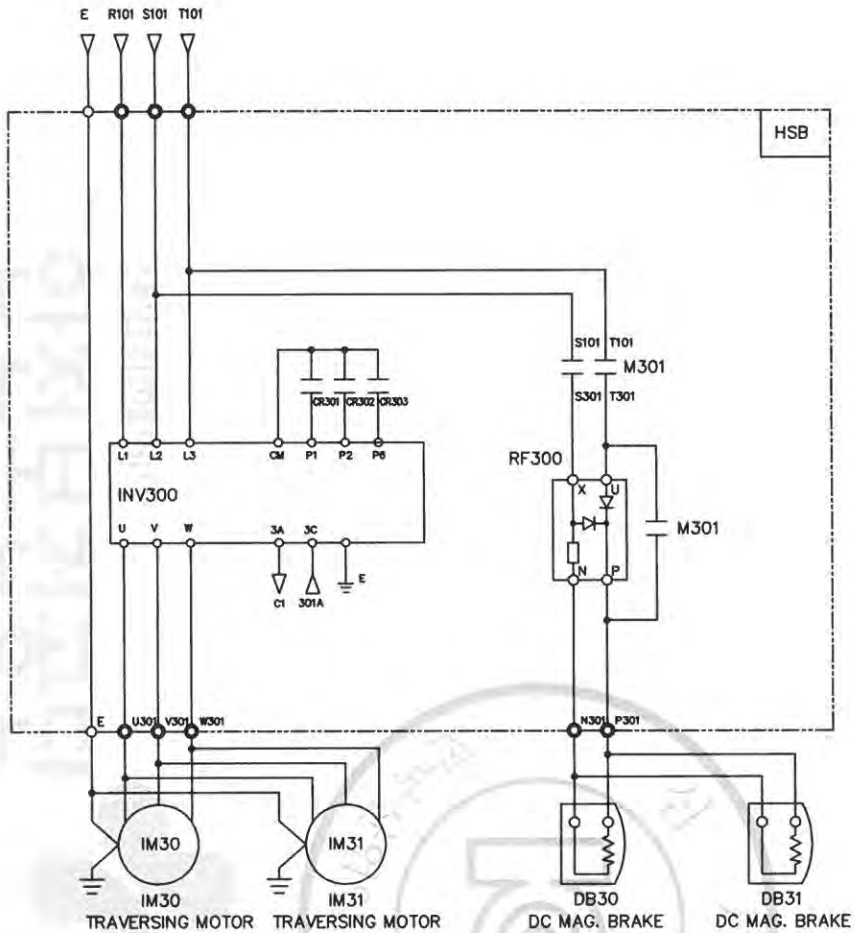


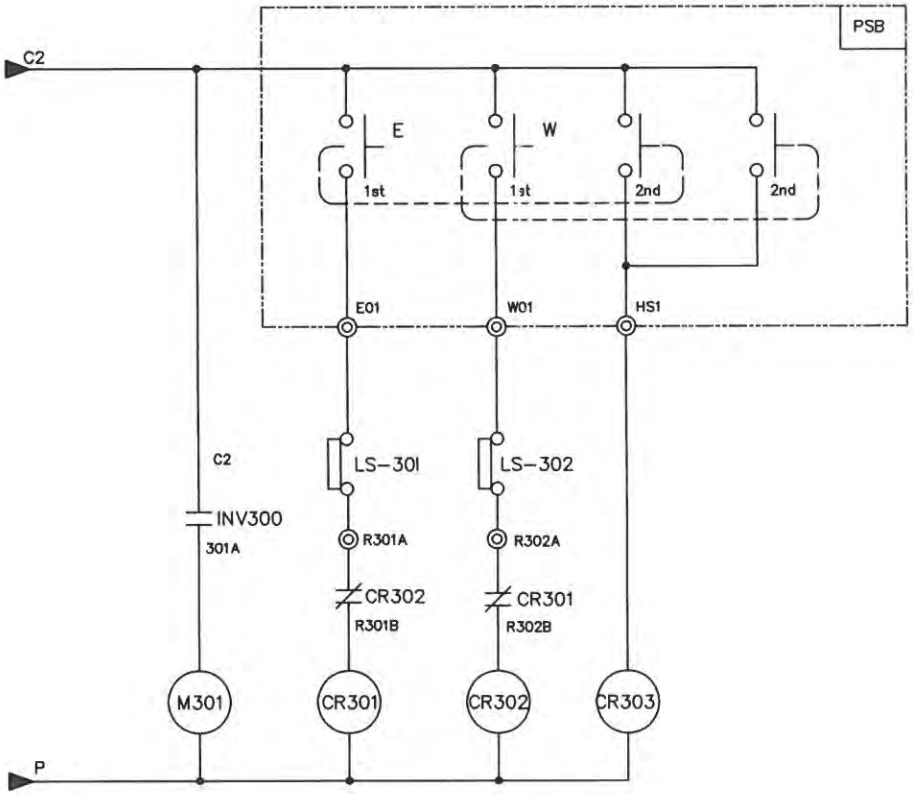


| SPECIFICATION / SYMBOLS / DESCRIPTION | TRAVERSING POWER | TRAVERSING MOTOR | DC.MAG' BRAKE | BRAKE MAGNET | CONTROL RELAY | INVERTER | SILICON RECTIFIER | LIMIT SWITCH |
|---|---|---|---|---|---|---|---|---|
| | | IM 30,31 | DB30,31 | M301 | CR301,302,303 | INV300 | RF300 | LS-301,302 |
| | AC 3PH 220V 60Hz | 0.75kW x 4P | DC 100V | DMC22b | MINI 4a4b | SV015iG5A-2 | BK-060J1 | KG-L001 |
| | | 0.5kW x 6P | DC 100V | DMC22b | MINI 4a4b | SV015iG5A-2 | BK-060J1 | KG-L001 |
| SELECTION / MAKER | KUK DONG HOIST | | | DONG A | | LS | BO KUK | KG AUTO |

| REV | DATE | DESCRIPTION | DRAWN | CHECK | APPRVD |
|---|---|---|---|---|---|
| A | 20.JAN.2021 | REDRAWING | K.H.Han | - | - |

TITLE
TRAVERSING CIRCUIT DIAGRAM
KDV5-M

CUSTOMER

극동호이스트 주식회사
KUKDONG HOIST CO., LTD.

| DESIGN | SCALE | SHT. NO. | ORDER NO. |
|---|---|---|---|
| | | | |

DWG. NO.
KD5-ED23

192.168.11.51 / 2021-02-05 15:49:22

불법복제 및 배포금지

| 1 | 2 | 3 | 4 | 5 | 6 | 7 | 8 | 9 | 10 | 11 | 12 | 13 | 14 | 15 | 16 | 17 | 18 | 19 | 20 |
|---|---|---|---|---|---|---|---|---|---|---|---|---|---|---|---|---|---|---|---|

ADR'S NO.

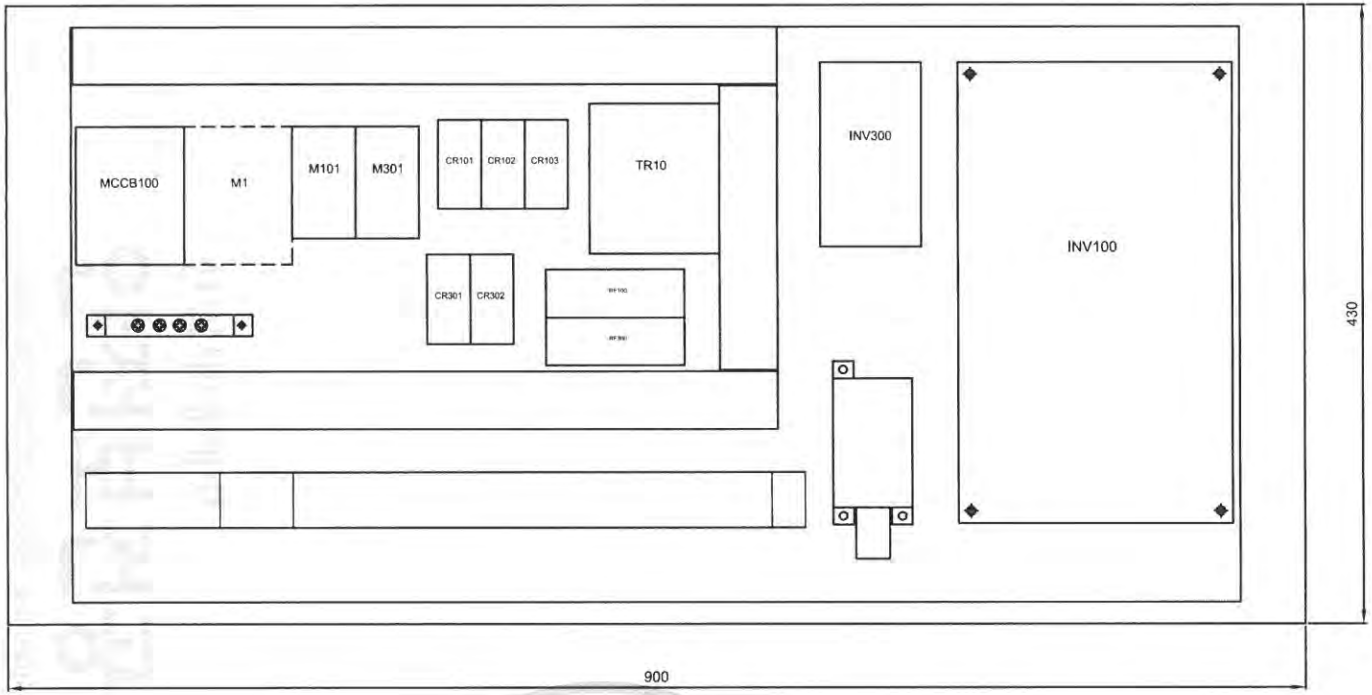


| NO | SYMBOL | SPECIFICATION | Q'TY | REMARK |
|---|---|---|---|---|
| 1 | MCCB100 | 30AF/30AT | 1 | |
| 2 | M1 | DMC40b | 1 | CRANE SCOPE |
| 3 | M101 | DMC22b | 1 | HOISTING |
| 4 | M301 | DMC22b | 1 | TRAVERSING |
| 5 | CR101,CR102,CR103 | MINI 4a4b | 2 | HOISTING |
| 6 | CR301,CR302 | MINI 4a4b | 2 | TRAVERSING |
| 7 | TR10 | 380,440,460,480V /110,120V 100VA | 1 | |
| 8 | RF100 | BK-060J1 | 1 | HOISTING |
| 9 | RF300 | BK-060J1 | 1 | TRAVERSING |
| 10 | INV100 | HIGH : VFD110CH43A-21<br>LOW : VFD075CH43A-21 | 1 | HOISTING |
| 11 | INV300 | 1DRIVE : SV008iG5A-4<br>2DRIVE : SV015iG5A-4 | 1 | TRAVERSING |

불법복제 및 배포금지

192.168.11.51 / 2021-02-05 15:49:22

N O T E

1. UPPER LIMIT LS-1,LS-2의 접점 허용 전류 용량. : AC 600V, 75A
2. POWER SOURCE : AC. 3ø 380,440,460,480V 60HZ
3. EARTH TERMINAL RESISTANCE : 0.018 Ω

: CRANE SCOPE

NOTE

1. 전선의 색상은 다음과 같다.
   1) 흑색 : 교류 및 직류 전원선로
   2) 적색 : 교류제어회로
   3) 주황색 : 외부 전원에서 공급되는 연동장치 제어회로
   4) 녹색 또는 녹색과 황색 혼용 : 접지선
   5) 청색 : 직류 제어선로
2. CABLE MATERIAL : KIV OR EQUIVALENT, MIN SIZE : 1.5sq
3. 제어용 전선 : 1.5mm KIV,HIV
4. 제작시 다소 변경 될수있음.
5. 외함 개방구조는 다음과 같을것.
   1) 외함 개방시 충전부분이 차단되도록 할것.
   2) 외함 개방후 충전되어있는 부분은 IP2X 이상의 직접 접촉 방호가 되어있을것.

| REV | DATE | DESCRIPTION | DRAWN | CHECK | APPRVD |
|---|---|---|---|---|---|
| A | 20.JAN.2021 | REDRAWING | K.H.Han | - | - |

TITLE: PANEL LAYOUT

KDV5-M

CUSTOMER

극동호이스트 주식회사
KUKDONG HOIST CO., LTD.

| DESIGN | SCALE | SHT. NO. | ORDER NO. |
|---|---|---|---|
| | | | |

DWG. NO. KD5-BD31

ADR'S NO.

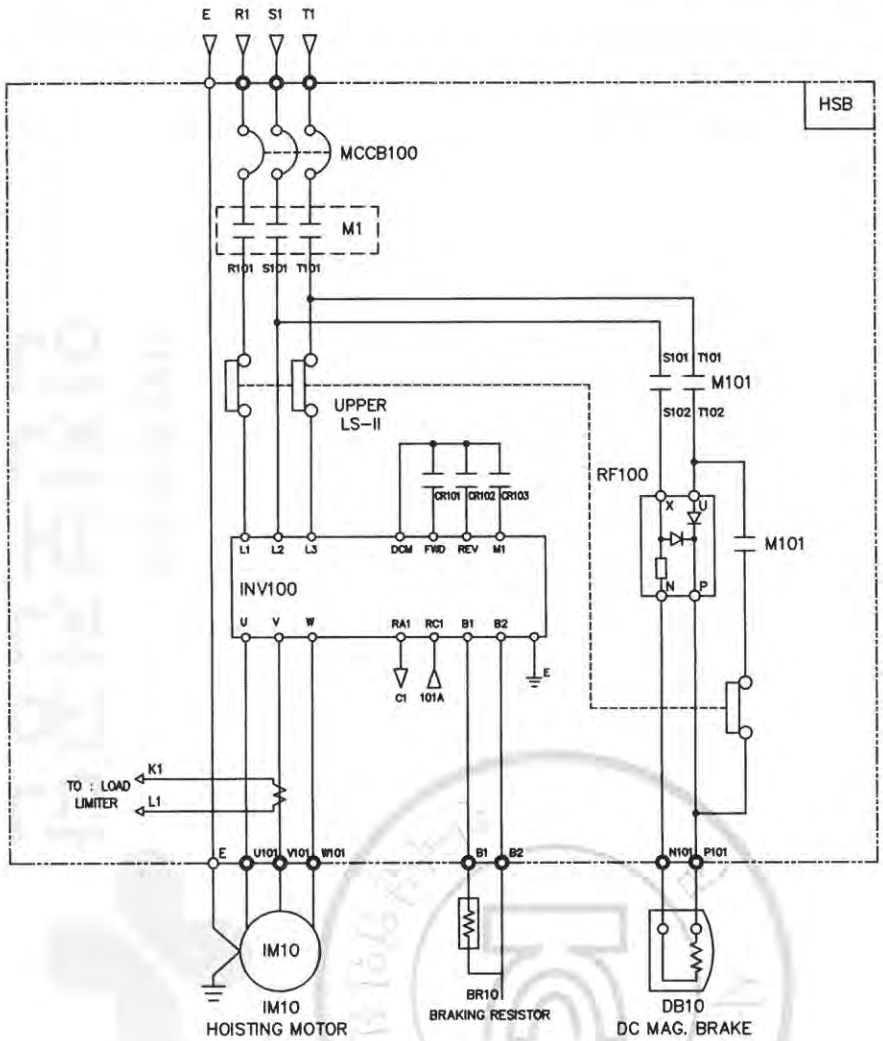


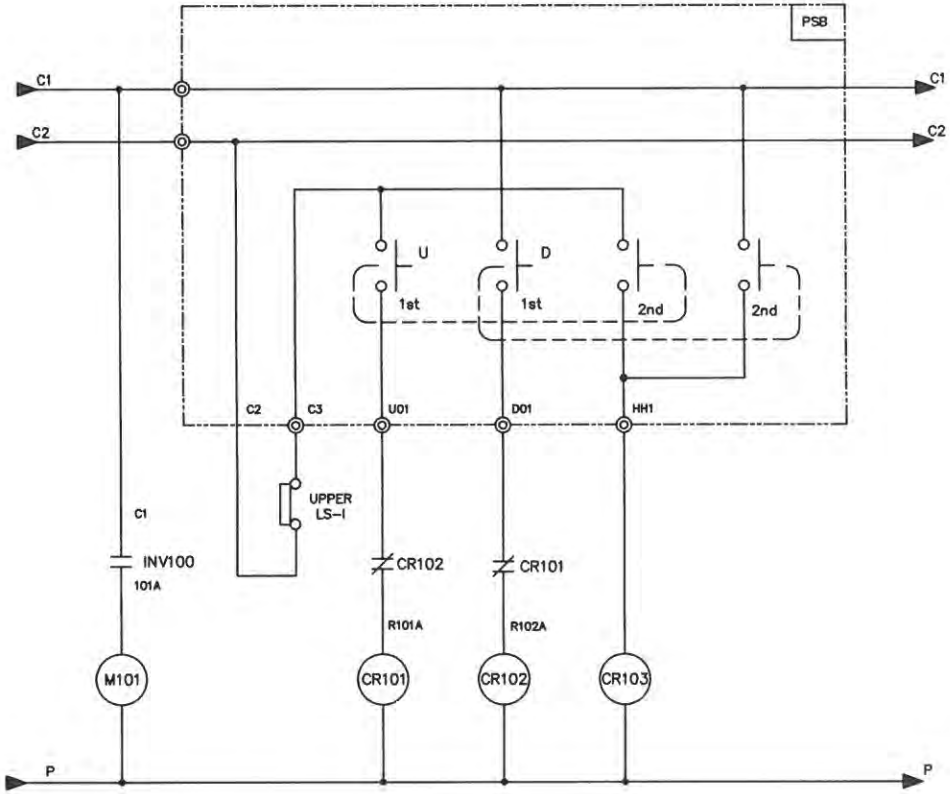


: CRANE SCOPE

| SPECIFICATION / SYMBOLS / DESCRIPTION | HOISTING POWER | HOISTING MOTOR | DC.MAG BRAKE | BRAKE MAGNET | MOLDED CASE CIRCUIT BREAKER | CONTROL RELAY | LOAD LIMITER | BRAKING RESISTOR | INVERTER | SILICON RECTIFIER | UPPER LIMIT |
|---|---|---|---|---|---|---|---|---|---|---|---|
| | | IM 10 | DB10 | M101 | MCCB100 | CR101,102,103 | LOAD LIMITER | BR10 | INV100 | RF100 | LS-I,II |
| | AC 3PH 380,440 460,480V 60Hz | 5.5kW x 6P | DC 100V | DMC22b | 30AF/30AT | MINI 4a4b | JDL-100 | 4kW, 43ohm | VFD110CH43A-21 | BK-060J1 | 600V 75A |
| | | 4.2kW x 8P | DC 100V | DMC22b | 30AF/30AT | MINI 4a4b | JDL-100 | 3kW, 75ohm | VFD075CH43A-21 | BK-060J1 | 600V 75A |
| SELECTION / MAKER | KUK DONG HOIST | | | DONG A | LS | | JUNG HO | DELTA | DELTA | BO KUK | KUK DONG |

| REV | DATE | DESCRIPTION | DRAWN | CHECK | APPRVD |
|---|---|---|---|---|---|
| A | 20.JAN.2021 | REDRAWING | K.H.Han | - | - |

TITLE
HOISTING CIRCUIT DIAGRAM
KDV5-M

CUSTOMER

극동호이스트 주식회사
KUKDONG HOIST CO., LTD.

| DESIGN | SCALE | SHT. NO. | ORDER NO. |
|---|---|---|---|
| | | | |

DWG. NO.
KD5-ED31

192.168.11.51 / 2021-02-05 15:49:22

불법복제 및 배포금지

ADR'S NO.

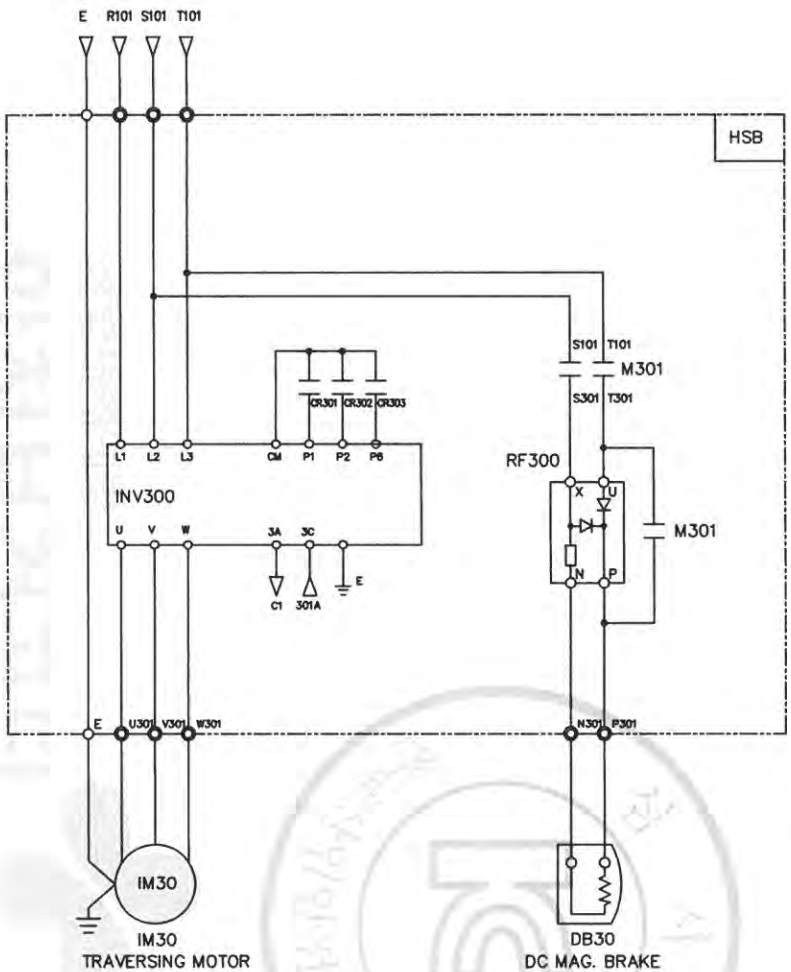


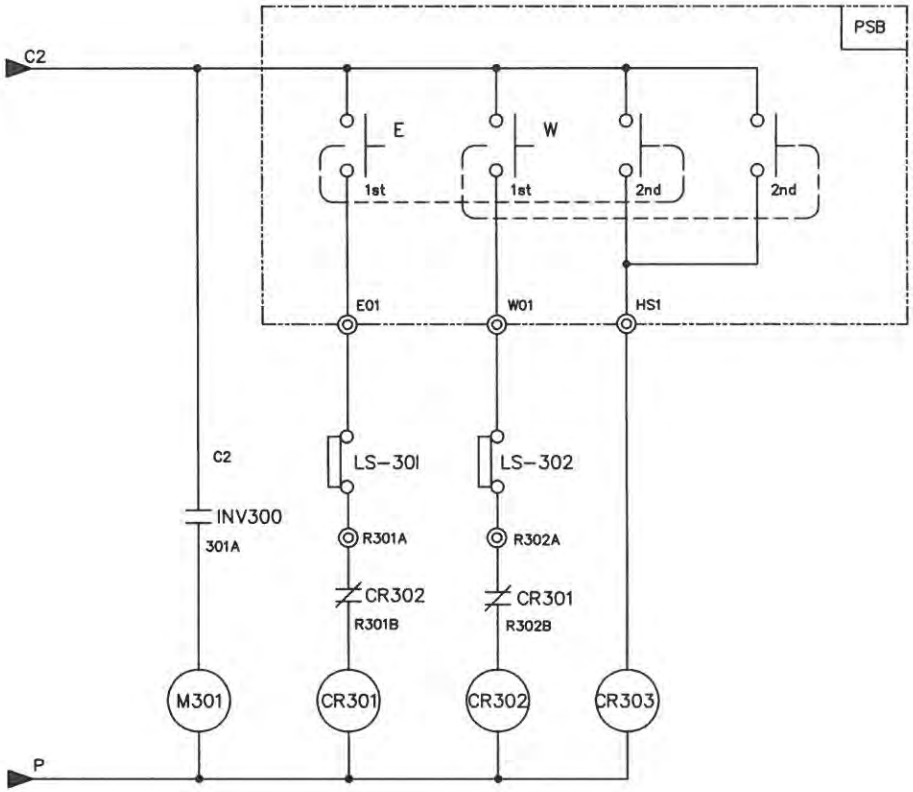


| SPECIFICATION / SYMBOLS / DESCRIPTION | TRAVERSING POWER | TRAVERSING MOTOR | DC.MAG' BRAKE | BRAKE MAGNET | CONTROL RELAY | INVERTER | SILICON RECTIFIER | LIMIT SWITCH |
|---|---|---|---|---|---|---|---|---|
| | | IM 30 | DB30 | M301 | CR301,302,303 | INV300 | RF300 | LS-301,302 |
| | AC 3PH 380,440 460,480V 60Hz | 0.75kW x 4P | DC 100V | DMC22b | MINI 4a4b | SV008iG5A-4 | BK-060J1 | KG-L001 |
| | | 0.5kW x 6P | DC 100V | DMC22b | MINI 4a4b | SV008iG5A-4 | BK-060J1 | KG-L001 |
| SELECTION MAKER | KUK DONG HOIST | | | DONG A | | LS | BO KUK | KG AUTO |

| REV | DATE | DESCRIPTION | DRAWN | CHECK | APPRVD |
|---|---|---|---|---|---|
| A | 20.JAN.2021 | REDRAWING | K.H.Han | - | - |

TITLE
TRAVERSING CIRCUIT DIAGRAM
KDV5-M

CUSTOMER

극동호이스트 주식회사
KUKDONG HOIST CO., LTD.

| DESIGN | SCALE | SHT. NO. | ORDER NO. |
|---|---|---|---|
| | | | |

DWG. NO.
KD5-ED32

192.168.11.51 / 2021-02-05 15:49:22

불법복제 및 배포금지

ADR'S NO.

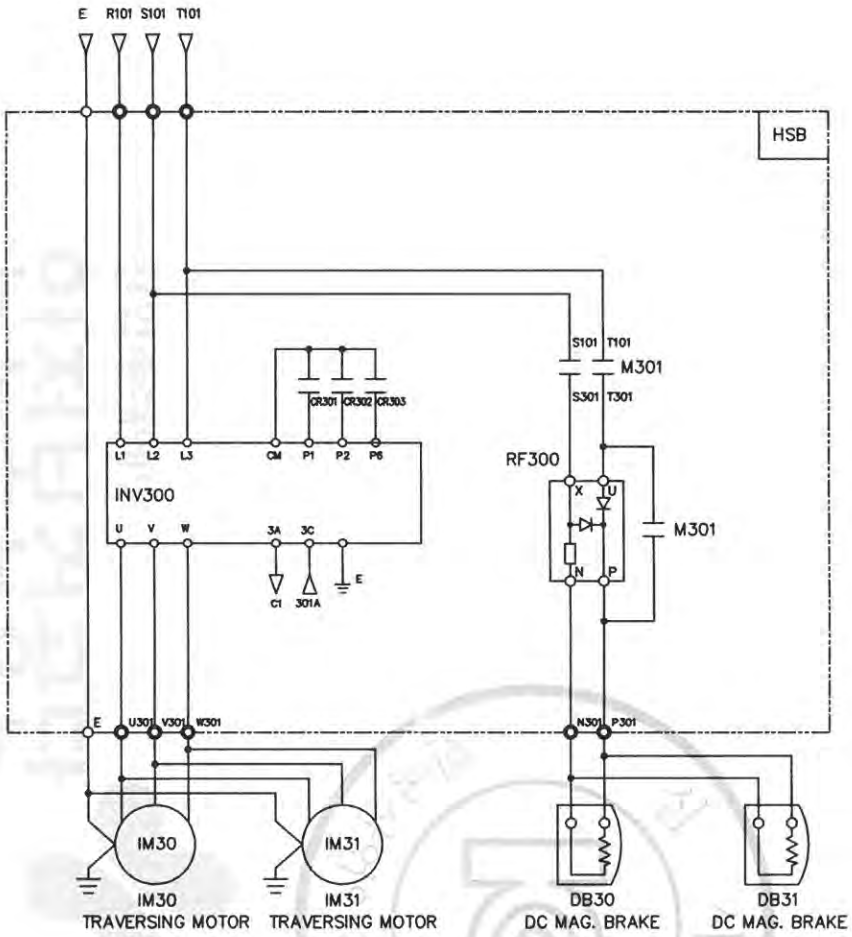


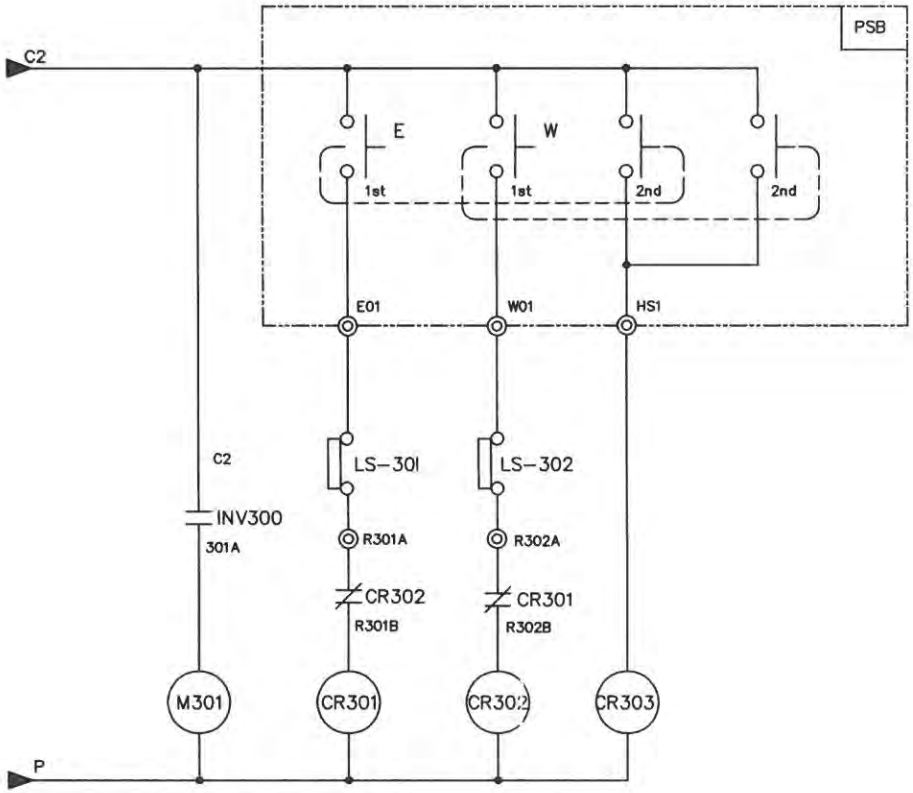


| SPECIFICATION / SYMBOLS / DESCRIPTION | TRAVERSING POWER | TRAVERSING MOTOR | DC.MAG' BRAKE | BRAKE MAGNET | CONTROL RELAY | INVERTER | SILICON RECTIFIER | LIMIT SWITCH |
|---|---|---|---|---|---|---|---|---|
| | | IM 30,31 | DB30,31 | M301 | CR301,302,303 | INV300 | RF300 | LS-301,302 |
| | AC 3PH 380,440 460,480V 60Hz | 0.75kW x 4P | DC 100V | DMC22b | MINI 4a4b | SV015iG5A-4 | BK-060J1 | KG-L001 |
| | | 0.5kW x 6P | DC 100V | DMC22b | MINI 4a4b | SV015iG5A-4 | BK-060J1 | KG-L001 |
| SELECTION MAKER | KUK DONG HOIST | | | DONG A | | LS | BO KUK | KG AUTO |

| REV | DATE | DESCRIPTION | DRAWN | CHECK | APPRVD |
|---|---|---|---|---|---|
| A | 20.JAN.2021 | REDRAWING | K.H.Han | - | - |

TITLE
TRAVERSING CIRCUIT DIAGRAM
KDV5-M

CUSTOMER

극동호이스트 주식회사
KUKDONG HOIST CO., LTD.

| DESIGN | SCALE | SHT. NO. | ORDER NO. |
|---|---|---|---|
| | | | |

DWG. NO.
KD5-ED33

불법복제 및 배포금지

192.168.11.51 / 2021-02-05 15:49:22

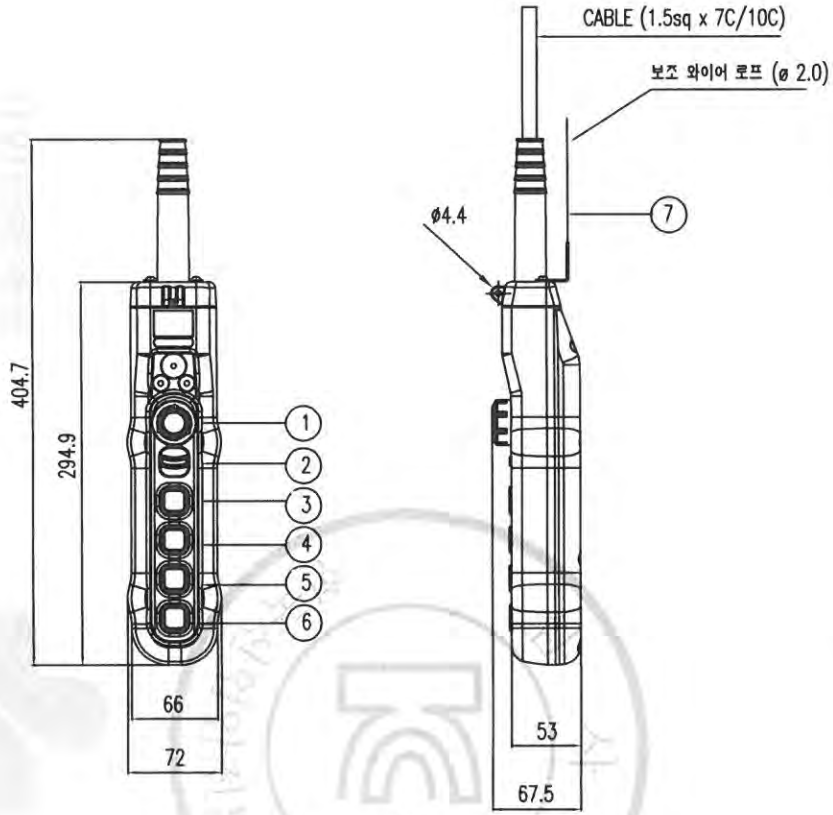


| 색상 \ 구분 | 조작버튼 | 표시등 |
|---|---|---|
| 적색 | 비상 | 비상 |
| 황색 | 비정상 | 비정상 |
| 녹색 | 정상 | 정상 |
| 청색 | 의무 | 의무 |
| 흰색,회색-흑색 | 지정된의미없음 | 기타 |

* MATERIAL : POLYCARBOBATE(PLASTIC)
* BODY COLOR : YELLOW, BLACK
* IP : 55 이상

| NO | SYMBOL | TYPE | SPEC. | COLOR |
|---|---|---|---|---|
| 1 | E.B.S | PUSH LOCK TURN RESET TYPE | 250VAC x 6A | RED |
| 2 | SPARE | | | BLACK |
| 3 | 상 | 1PUSH BUTTON 1STEP (2STEP) | | |
| 4 | 하 | 1PUSH BUTTON 1STEP (2STEP) | | |
| 5 | 동(전) | 1PUSH BUTTON 1STEP (2STEP) | | |
| 6 | 서(후) | 1PUSH BUTTON 1STEP (2STEP) | | |
| 7 | 보조 와이어 | ø 2.0 | | |

| REV | DATE | DESCRIPTION | DRAWN | CHECK | APPRVD |
|---|---|---|---|---|---|
| A | 05.AUG.2016 | REDRAWING | K.H.Han | - | - |

TITLE
PENDANT PUSH BUTTON SWITCH
LAY OUT

CUSTOMER

극동호이스트 주식회사
KUKDONG HOIST CO., LTD.

| DESIGN | SCALE | SHT. NO. | ORDER NO. |
|---|---|---|---|
| | | | |

DWG. NO.

192.168.11.51 / 2021-02-05 15:49:22
불법복제 및 배포금지

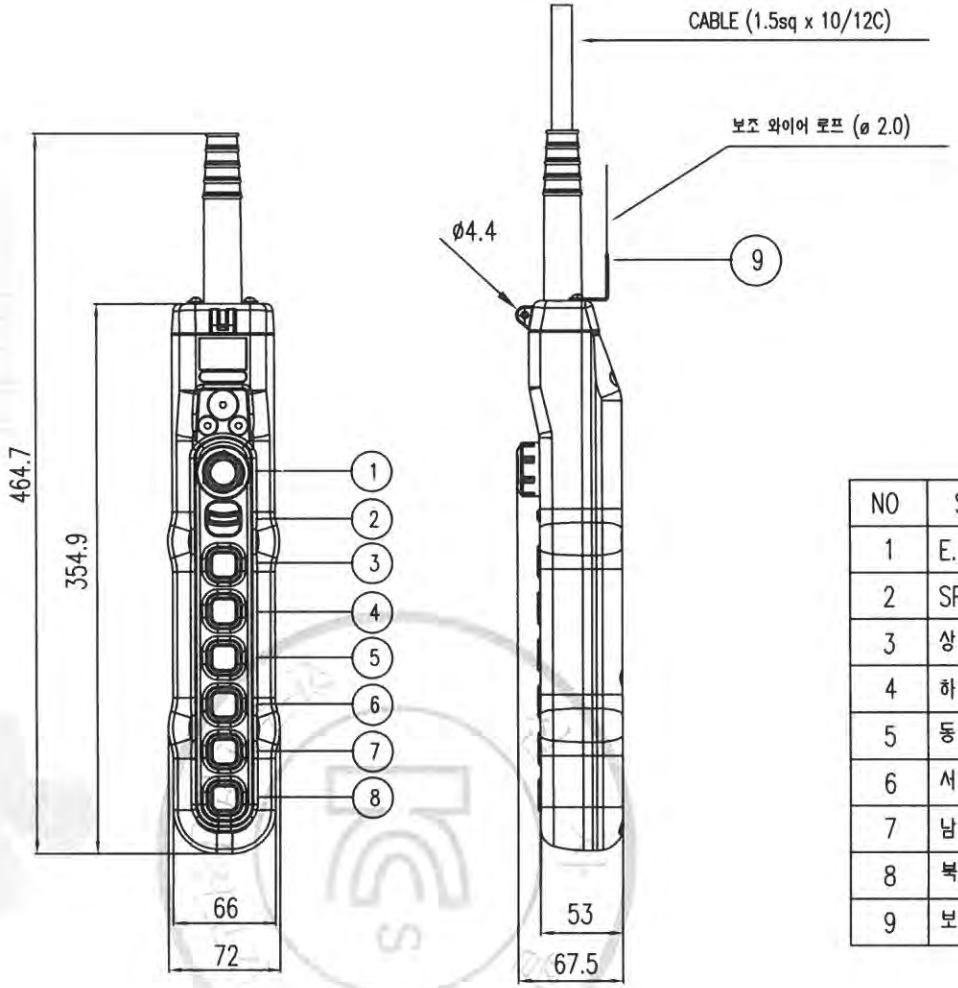


| 구분 / 색상 | 조작버튼 | 표시등 |
|---|---|---|
| 적색 | 비상 | 비상 |
| 황색 | 비정상 | 비정상 |
| 녹색 | 정상 | 정상 |
| 청색 | 의무 | 의무 |
| 흰색,회색-흑색 | 지정된의미없음 | 기타 |

* MATERIAL : POLYCARBOBATE(PLASTIC)
* BODY COLOR : YELLOW, BLACK
* IP : 55 이상

| NO | SYMBOL | TYPE | SPEC. | COLOR |
|---|---|---|---|---|
| 1 | E.B.S | PUSH LOCK TURN RESET TYPE | 250VAC x 6A | RED |
| 2 | SPARE | | | BLACK |
| 3 | 상 | 1PUSH BUTTON 1STEP (2STEP) | | |
| 4 | 하 | 1PUSH BUTTON 1STEP (2STEP) | | |
| 5 | 동 (좌) | 1PUSH BUTTON 1STEP (2STEP) | | |
| 6 | 서 (우) | 1PUSH BUTTON 1STEP (2STEP) | | |
| 7 | 남 (전) | 1PUSH BUTTON 1STEP (2STEP) | | |
| 8 | 북 (후) | 1PUSH BUTTON 1STEP (2STEP) | | |
| 9 | 보조 WIRE | ø 2.0 | | |

| REV | DATE | DESCRIPTION | DRAWN | CHECK | APPRVD |
|---|---|---|---|---|---|
| | 05.AUG.2016 | REDRAWING | K.H.Han | - | - |

TITLE
PENDANT PUSH BUTTON SWITCH
LAY OUT

CUSTOMER

극동호이스트 주식회사
KUKDONG HOIST CO., LTD.

| DESIGN | SCALE | SHT. NO. | ORDER NO. |
|---|---|---|---|
| | | | |

DWG. NO.

192.168.11.51 / 2021-02-05 15:49:22
불법복제 및 배포금지

불법복제 및 배포금지

# I - BEAM 강도계산서

192.168.11.51 / 2021-02-05 15:49:22

불법복제 및 배포금지

# I-BEAM 최대지지거리

☞ 최대지지거리 판정결과

| I-BEAM 규격 | 최대 지지거리 (cm) | 처짐량 판정1 > 800 | 처짐량 판정2 >1000 | 굽힘응력(kg/㎠) < 1159 |
|---|---|---|---|---|
| 150×125×t8.5/14 | 130 | 1746.8 | 1755.4 | 1079.7 |
| 200×150×t9/16 | 250 | 1187.2 | 1202.9 | 1116.1 |
| 250×125×t7.5/12.5 | 230 | 1635.5 | 1650.6 | 1146.6 |
| 250×125×t10/19 | 320 | 1181.4 | 1203.3 | 1134.9 |
| 300×150×t8/13 | 340 | 1359 | 1382.3 | 1143.9 |
| 300×150×t10/18.5 | 450 | 1025.6 | 1057.2 | 1138.9 |
| 300×150×t11.5/22 | 490 | 993 | 1032 | 1081.5 |
| 350×150×t9/15 | 440 | 1288.7 | 1323.4 | 1129.1 |
| 350×150×t12/24 | 610 | 961.3 | 1014.7 | 1090.2 |
| 400×150×t10/18 | 570 | 1198.9 | 1250.3 | 1133.1 |
| 400×150×t12.5/25 | 730 | 934.4 | 1002.7 | 1137.8 |
| 450×175×t11/20 | 780 | 1010.5 | 1086.1 | 1147.7 |
| 450×175×t13/26 | 900 | 916.4 | 1015.5 | 1089.9 |

☞ 기본 조건

| 정격하중 (Kg) | 양정 (m) | 권상속도 (m/min) | 호이스트 | | 작업계수 | 풍력계수 |
|---|---|---|---|---|---|---|
| | | | 자중 (Kg) | 풍압면적 (㎡) | | |
| 5000 | 30 | 5.6 | 980 | 1.35 | 1.14 | 1.2 |

*첨부 강도계산서 참조

192.168.11.51 / 2021-02-05 15:49:22

불법복제 및 배포금지

# [I-BEAM 최대 지지거리 강도계산서]

## 1. 굽힘 MOMENT 계산

### 1-1. 수직하중에 의한 굽힘 MOMENT

빔 자중에 의한 MOMENT : $Ms = \dfrac{\phi \times \text{BEAM자중(등분포하중)} \times \text{지지거리}}{8}$ (kg · cm)

※ 작업계수(φ) = 1.14

※ BEAM 자중 (kg) = BEAM 단위중량(kg/cm) x 지지거리(cm)

이동하중에 의한 MOMENT : $Md = \dfrac{\phi \times \Psi \times \text{이동하중} \times \text{지지거리}}{4}$ (kg · cm)

※ 이동하중 (kg) = 정격하중 + 호이스트 자중
= 5000 + 980 = 5980 (kg)

※ 충격계수(Ψ) = 1 + 0.6V (단, Ψ <1.1 이면 Ψ = 1.1, Ψ > 1.6 이면 Ψ = 1.6 으로 한다.
= 1 + (0.6 x 0.093) = 1.0558 ——> 1.1

※ 권상속도(V) = $\dfrac{5.6}{60}$ (m/min) = 0.093 (m/sec)

수직하중에 의한 굽힘 MOMENT : $\Sigma Mv = Ms + Md$

### 1-2. 풍하중에 의한 굽힘 MOMENT

풍하중에 의한 MOMENT : $Mw = \dfrac{\text{풍하중(W)} \times \text{지지거리}}{2}$

※풍하중 (W) = 속도압(q) x 풍력계수 x 풍압을 받는 면적 (A) (kg)

※속도압(q) : = 8.5 x $\sqrt[4]{h}$ = 19.9 (h= 양정: 30 )

※풍력계수(C) = 1.2 (크레인 제작기준 참조)

※풍압을 받는 면적 (A) = I-BEAM의 풍압면적 + HOIST의 풍압면적 (㎡)

※HOIST의 풍압 면적 ≒ 1.35 (㎡)

## 2. 굽힘 응력 계산

### 2-1. 수직하중에 의한 굽힘 응력

$\sigma_v = \dfrac{\text{수직하중에 의한 굽힘MOMENT : } \Sigma Mv}{\text{단면 계수 : } Zx}$ (kg/㎠)

### 2-2. 풍하중에 의한 굽힘 응력

$\sigma_w = \dfrac{\text{풍하중에 의한 굽힘 MOMENT : } Mw}{\text{단면계수 : } Zy}$ (kg/㎠)

### 2-3.수직하중 및 풍하중에 의한 굽힘 응력

$\Sigma\sigma = \sigma_v + \sigma_w$

192.168.11.51 / 2021-02-05 15:49:22

표1. I-BEAM 최대지지거리에 따른 굽힘응력 계산 결과

| I-BEAM 규격 | 최대지지거리(cm) | I-BEAM | | 단면계수 | | Ms | Md | ΣMv | I-BEAM 풍압면적 (㎡) | W (kg) | Mw (kg · cm) | σv (kg/㎠) | σw (kg/㎠) |
|---|---|---|---|---|---|---|---|---|---|---|---|---|---|
| | | 단위중량 (kg/cm) | 자중 (kg) | Zx (㎤) | Zy (㎤) | (kg · cm) | (kg · cm) | (kg · cm) | | | | | |
| 150×125×t8.5/14 | 130 | 0.362 | 47.06 | 235 | 61.6 | 871.79 | 243714.90 | 244586.69 | 0.20 | 36.89 | 2398.15 | 1040.79 | 38.93 |
| 200×150×t9/16 | 250 | 0.504 | 126 | 446 | 100 | 4488.75 | 468682.50 | 473171.25 | 0.50 | 44.18 | 5522.25 | 1060.92 | 55.22 |
| 250×125×t7.5/12.5 | 230 | 0.383 | 88.09 | 414 | 53.9 | 2887.15 | 431187.90 | 434075.05 | 0.58 | 45.97 | 5286.44 | 1048.49 | 98.08 |
| 250×125×t10/19 | 320 | 0.555 | 177.6 | 585 | 86 | 8098.56 | 599913.60 | 608012.16 | 0.80 | 51.34 | 8214.72 | 1039.34 | 95.52 |
| 300×150×t8/13 | 340 | 0.483 | 164.22 | 632 | 78.4 | 7956.46 | 637408.20 | 645364.66 | 1.02 | 56.60 | 9621.25 | 1021.15 | 122.72 |
| 300×150×t10/18.5 | 450 | 0.655 | 294.75 | 849 | 118 | 18900.84 | 843628.50 | 862529.34 | 1.35 | 64.48 | 14507.10 | 1015.94 | 122.94 |
| 300×150×t11.5/22 | 490 | 0.768 | 376.32 | 978 | 143 | 26276.54 | 918617.70 | 944894.24 | 1.47 | 67.34 | 16498.69 | 966.15 | 115.38 |
| 350×150×t9/15 | 440 | 0.585 | 257.4 | 870 | 93.5 | 16138.98 | 824881.20 | 841020.18 | 1.54 | 69.01 | 15182.90 | 966.69 | 162.38 |
| 350×150×t12/24 | 610 | 0.872 | 531.92 | 1280 | 158 | 46237.15 | 1143585.30 | 1189822.45 | 2.14 | 83.22 | 25382.65 | 929.55 | 160.65 |
| 400×150×t10/18 | 570 | 0.72 | 410.4 | 1200 | 115 | 33334.74 | 1068596.10 | 1101930.84 | 2.28 | 86.68 | 24705.05 | 918.28 | 214.83 |
| 400×150×t12.5/25 | 730 | 0.958 | 699.34 | 1580 | 165 | 72748.84 | 1368552.90 | 1441301.74 | 2.92 | 101.97 | 37218.17 | 912.22 | 225.56 |
| 450×175×t11/20 | 780 | 0.917 | 715.26 | 1740 | 173 | 79501.15 | 1462289.40 | 1541790.55 | 3.51 | 116.06 | 45262.15 | 886.09 | 261.63 |
| 450×175×t13/26 | 900 | 1.15 | 1035 | 2170 | 231 | 132738.75 | 1687257.00 | 1819995.75 | 4.05 | 128.95 | 58028.40 | 838.71 | 251.21 |

불법복제 및 배포금지

192.168.11.51 / 2021-02-05 15:49:22

불법복제 및 배포금지

## [I-BEAM의 처짐량(Deflection) 및 최대굽힘응력 판정 결과]

1. 처짐량 판정 1
   판정기준: $L / \sigma > 800$
   ※ $\sigma = \sigma_s + \sigma_d$

2. 처짐량 판정 2
   판정기준: $L / \sigma_d > 1000$

3. 최대굽힘응력 판정
   판정기준: $\Sigma\sigma \leq 1159$ (kg/㎠) (= SS400 허용굽힘응력 1449 x 0.8)
   ※ $\Sigma\sigma = \sigma_v + \sigma_w$

※I-BEAM 자중에 의한 처짐($\sigma s$)

$$\sigma_s = \frac{5 \times \text{I-Beam자중} \times \text{지지거리}^3}{384 \times E \times Ix}$$

※이동하중에 의한 처짐($\sigma d$)

$$\sigma_d = \frac{(\text{정격하중} + \text{호이스트 자중}) \times \text{지지거리}^3}{48 \times E \times Ix}$$

E = 종탄성계수 (2,100,000 kg/㎠ )
Ix = 단면2차MOMENT

| | | | | | 판정기준 | | |
|---|---|---|---|---|---|---|---|
| | | | | | > 800 | > 1000 | ≤ 1159 |
| I-BEAM 규격 | Ix ($cm^4$) | 최대지지거리(cm) | $\sigma s$ (cm) | $\sigma d$ (cm) | 처짐량판정1 | 처짐량판정2 | $\Sigma\sigma$ (kg/㎠) |
| 150×125×t8.5/14 | 1760 | 130 | 0.0004 | 0.0741 | 1746.8 | 1755.4 | 1079.7 |
| 200×150×t9/16 | 4460 | 250 | 0.0027 | 0.2078 | 1187.2 | 1202.9 | 1116.1 |
| 250×125×t7.5/12.5 | 5180 | 230 | 0.0013 | 0.1393 | 1635.5 | 1650.6 | 1146.6 |
| 250×125×t10/19 | 7310 | 320 | 0.0049 | 0.2659 | 1181.4 | 1203.3 | 1134.9 |
| 300×150×t8/13 | 9480 | 340 | 0.0042 | 0.2460 | 1359 | 1382.3 | 1143.9 |
| 300×150×t10/18.5 | 12700 | 450 | 0.0131 | 0.4257 | 1025.6 | 1057.2 | 1138.9 |
| 300×150×t11.5/22 | 14700 | 490 | 0.0187 | 0.4748 | 993 | 1032 | 1081.5 |
| 350×150×t9/15 | 15200 | 440 | 0.0089 | 0.3325 | 1288.7 | 1323.4 | 1129.1 |
| 350×150×t12/24 | 22400 | 610 | 0.0334 | 0.6011 | 961.3 | 1014.7 | 1090.2 |
| 400×150×t10/18 | 24100 | 570 | 0.0196 | 0.4559 | 1198.9 | 1250.3 | 1133.1 |
| 400×150×t12.5/25 | 31700 | 730 | 0.0532 | 0.7280 | 934.4 | 1002.7 | 1137.8 |
| 450×175×t11/20 | 39200 | 780 | 0.0537 | 0.7182 | 1010.5 | 1086.1 | 1147.7 |
| 450×175×t13/26 | 48800 | 900 | 0.0959 | 0.8862 | 916.4 | 1015.5 | 1089.9 |

안전보건공단

192.168.11.51 / 2021-02-05 15:49:22

불법복제 및 배포금지

## ▣ I-BEAM의 고정방법 및 사양

1. I-BEAM의 고정방법

| 용접구조 | BOLT 체결구조 | 복합구조 |
|---|---|---|
| 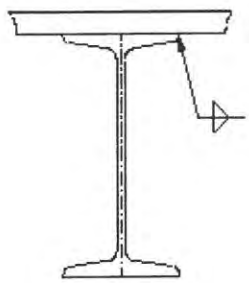 | 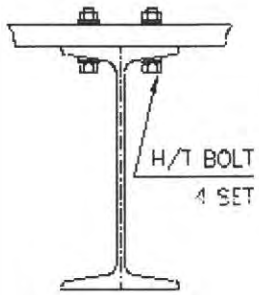 | 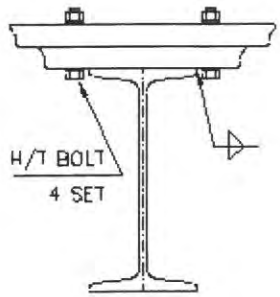 |

2. 기본조건 및 사양

* 용접이음의 허용응력(필렛용접 효율 포함) : 560kg/㎠
* 필렛 용접효율 : 80%
* H/T BOLT의 허용 인장응력 : 2,500kg/㎠

단위: mm

| 정격하중(Kg) | 용접구조 | | BOLT 체결구조 |
|---|---|---|---|
| | 최소 용접두께 | 최소 용접길이 | 최소 BOLT SIZE |
| 5000 | 6 | 175 | M16 x 4set |

단, 적용 I-BEAM 400×175×t13/26 의 경우임

※강도계산서 참조

192.168.11.51 / 2021-02-05 15:49:22

불법복제 및 배포금지

# [I-BEAM 고정볼트 강도 및 용접강도 계산서]

## 1) I-BEAM 고정방법중 BOLT구조의 강도 계산

[H/T BOLT의 허용인장응력 : 2500 kg/㎠]

☞ 작용하중 계산

$$P = \Psi \times (Q+Q1) + \phi \times Q2$$

| | |
|---|---|
| 충격계수 Ψ = | 1.1 |
| 작업계수 ϕ = | 1.14 |
| 정격하중 Q = | 5000 |
| HOIST자중 Q1 = | 980 |

☞ BOLT 1 개당 인장강도 계산

$$\sigma = \frac{P}{A} = 4 \times \frac{P}{(\pi \times d2 \times z)}$$

※ 판정기준: σ < 2500 kg/㎠

| BEAM 규격 | BEAM자중 (kg) | 하중 P(kg) | BOLT 규격 | BOLT수 | BOLT 단면적 (㎠) | BOLT강도 |
|---|---|---|---|---|---|---|
| 150×125×t8.5/14 | 47.06 | 6631.6 | M12 | 4 | 1.13 | 1467.2 |
| 200×150×t9/16 | 126 | 6721.6 | M12 | 4 | 1.13 | 1487.1 |
| 250×125×t7.5/12.5 | 88.09 | 6678.4 | M12 | 4 | 1.13 | 1477.5 |
| 250×125×t10/19 | 177.6 | 6780.5 | M16 | 4 | 2.01 | 843.3 |
| 300×150×t8/13 | 164.22 | 6765.2 | M12 | 4 | 1.13 | 1496.7 |
| 300×150×t10/18.5 | 294.75 | 6914 | M16 | 4 | 2.01 | 860 |
| 300×150×t11.5/22 | 376.32 | 7007 | M16 | 4 | 2.01 | 871.5 |
| 350×150×t9/15 | 257.4 | 6871.4 | M16 | 4 | 2.01 | 854.7 |
| 350×150×t12/24 | 531.92 | 7184.4 | M16 | 4 | 2.01 | 893.6 |
| 400×150×t10/18 | 410.4 | 7045.9 | M16 | 4 | 2.01 | 876.4 |
| 400×150×t12.5/25 | 699.34 | 7375.2 | M16 | 4 | 2.01 | 917.3 |
| 450×175×t11/20 | 715.26 | 7393.4 | M16 | 4 | 2.01 | 919.6 |
| 450×175×t13/26 | 1035 | 7757.9 | M16 | 4 | 2.01 | 964.9 |

안전보건공단

192.168.11.51 / 2021-02-05 15:49:22

불법복제 및 배포금지

2) I-BEAM 고정방법중 용접구조의 강도 계산

[용접이음의 허용응력: 560 kg/㎠]

☞ 용접강도 계산

$$\sigma w = \frac{P}{0.707 x t x 2 x l} \quad kg/㎠$$

※ 판정기준: σw < 560 kg/㎠

| BEAM 규격 | 하중 P(kg) | 용접두께 t(cm) | 용접길이 l(cm) | 용접강도 σw(kg/㎠) |
|---|---|---|---|---|
| 150×125×t8.5/14 | 6631.6 | 0.8 | 12.5 | 469 |
| 200×150×t9/16 | 6721.6 | 0.6 | 15 | 528.2 |
| 250×125×t7.5/12.5 | 6678.4 | 0.8 | 12.5 | 472.3 |
| 250×125×t10/19 | 6780.5 | 0.8 | 12.5 | 479.5 |
| 300×150×t8/13 | 6765.2 | 0.6 | 15 | 531.6 |
| 300×150×t10/18.5 | 6914 | 0.6 | 15 | 543.3 |
| 300×150×t11.5/22 | 7007 | 0.6 | 15 | 550.6 |
| 350×150×t9/15 | 6871.4 | 0.6 | 15 | 539.9 |
| 350×150×t12/24 | 7184.4 | 0.8 | 15 | 423.4 |
| 400×150×t10/18 | 7045.9 | 0.6 | 15 | 553.7 |
| 400×150×t12.5/25 | 7375.2 | 0.8 | 15 | 434.7 |
| 450×175×t11/20 | 7393.4 | 0.6 | 17.5 | 498 |
| 450×175×t13/26 | 7757.9 | 0.6 | 17.5 | 522.5 |

이전보전공단

192.168.11.51 / 2021-02-05 15:49:22

불법복제 및 배포금지

# Ⅳ. 참고자료

192.168.11.51 / 2021-02-05 15:49:22

# LOAD LIMITER 권고 SETTING치

* POWER SOURCE : AC 3¢ 220V 60Hz

극동호이스트(주)

| HOIST | MOTOR 용량 | LOAD LIMITER 권고 SETTING치 | | | LOAD CURRENT | | C.T MODEL | 연결단자 NO | C.T 용량 | REMARK |
|---|---|---|---|---|---|---|---|---|---|---|
| | | LOAD CURRENT | ADJ START TIME | SHOCK TIME | 100% | 110% | | | | |
| 0.5 TON | 1.2KW x 8P | 110% | 1 SEC | 1 SEC | 8.0 A | 8.8 A | CT-1 | K, L | 5 V.A | |
| | 1.5KW x 6P | 110% | 1 SEC | 1 SEC | 7.6 A | 8.4 A | CT-1 | K, L | 5 V.A | |
| | 2.4KW x 4P | 110% | 1 SEC | 1 SEC | 10.0 A | 11.0 A | CT-1 | K, L | 5 V.A | |
| 1 TON | 1.2KW x 8P | 110% | 1 SEC | 1 SEC | 8.0 A | 8.8 A | CT-1 | K, L | 5 V.A | |
| | 2.4KW x 4P | 110% | 1 SEC | 1 SEC | 10.0 A | 11.0 A | CT-1 | K, L | 5 V.A | |
| 2 TON | 1.8KW x 8P | 110% | 1 SEC | 1 SEC | 11.0 A | 12.1 A | CT-1 | K, L | 5 V.A | |
| | 2.5KW x 6P | 110% | 1 SEC | 1 SEC | 12.0 A | 13.2 A | CT-1 | K, L | 5 V.A | |
| | 3.7KW x 4P | 110% | 1 SEC | 1 SEC | 16.0 A | 17.6 A | CT-1 | K, L | 5 V.A | |
| 2.8 TON | 2.5KW x 8P | 110% | 1 SEC | 1 SEC | 17.7 A | 19.5 A | CT-1 | K, L | 5 V.A | |
| | 5.0KW x 4P | 110% | 1 SEC | 1 SEC | 23.0 A | 25.3 A | CT-1 | K, L | 5 V.A | |
| 3 TON | 2.8KW x 8P | 110% | 1 SEC | 1 SEC | 17.7 A | 19.5 A | CT-1 | K, L | 5 V.A | |
| | 5.5KW x 4P | 110% | 1 SEC | 1 SEC | 22.8 A | 25.1 A | CT-1 | K, L | 5 V.A | |
| 5 TON | 4.2KW x 8P | 110% | 1 SEC | 1 SEC | 23.0 A | 25.3 A | CT-1 | K, L | 5 V.A | |
| | 5.5KW x 6P | 110% | 1 SEC | 1 SEC | 28.2 A | 31.0 A | CT-1 | K, L | 5 V.A | |
| 7.5 TON | 4.2KW x 8P | 110% | 1 SEC | 1 SEC | 23.0 A | 25.3 A | CT-1 | K, L | 5 V.A | |
| | 5.5KW x 6P | 110% | 1 SEC | 1 SEC | 28.2 A | 31.0 A | CT-1 | K, L | 5 V.A | |

NOTE

1. 상기 TABLE의 수치는 권고 SETTING 수치이며 MOTOR의 특성 및 현장 조건에 따라 변경 가능함.

불법복제 및 배포금지

192.168.11.51 / 2021-02-05 15:49:22

# LOAD LIMITER 권고 SETTING치

* POWER SOURCE : AC 3¢ 380V 60Hz

극동호이스트(주)

| HOIST | MOTOR 용량 | LOAD LIMITER 권고 SETTING치 | | | LOAD CURRENT | | C.T MODEL | 연결단자 NO | C.T 용량 | REMARK |
|---|---|---|---|---|---|---|---|---|---|---|
| | | LOAD CURRENT | ADJ START TIME | SHOCK TIME | 100% | 110% | | | | |
| 0.5 TON | 1.2KW x 8P | 110% | 1 SEC | 1 SEC | 4.6 A | 5.1 A | CT-1 | K, L | 5 V.A | |
| | 1.5KW x 6P | 110% | 1 SEC | 1 SEC | 5.5 A | 6.1 A | CT-1 | K, L | 5 V.A | |
| | 2.4KW x 4P | 110% | 1 SEC | 1 SEC | 5.6 A | 6.2 A | CT-1 | K, L | 5 V.A | |
| 1 TON | 1.2KW x 8P | 110% | 1 SEC | 1 SEC | 4.6 A | 5.1 A | CT-1 | K, L | 5 V.A | |
| | 2.4KW x 4P | 110% | 1 SEC | 1 SEC | 5.6 A | 6.2 A | CT-1 | K, L | 5 V.A | |
| 2 TON | 1.8KW x 8P | 110% | 1 SEC | 1 SEC | 6.4 A | 7.0 A | CT-1 | K, L | 5 V.A | |
| | 2.5KW x 6P | 110% | 1 SEC | 1 SEC | 7.0 A | 7.7 A | CT-1 | K, L | 5 V.A | |
| | 3.7KW x 4P | 110% | 1 SEC | 1 SEC | 9.3 A | 10.2 A | CT-1 | K, L | 5 V.A | |
| 2.8 TON | 2.5KW x 8P | 110% | 1 SEC | 1 SEC | 10.3 A | 11.3 A | CT-1 | K, L | 5 V.A | |
| | 5.0KW x 4P | 110% | 1 SEC | 1 SEC | 12.2 A | 13.4 A | CT-1 | K, L | 5 V.A | |
| 3 TON | 2.8KW x 8P | 110% | 1 SEC | 1 SEC | 10.3 A | 11.3 A | CT-1 | K, L | 5 V.A | |
| | 5.5KW x 4P | 110% | 1 SEC | 1 SEC | 12.2 A | 13.4 A | CT-1 | K, L | 5 V.A | |
| 5 TON | 4.2KW x 8P | 110% | 1 SEC | 1 SEC | 13.3 A | 14.6 A | CT-1 | K, L | 5 V.A | |
| | 5.5KW x 6P | 110% | 1 SEC | 1 SEC | 16.3 A | 17.9 A | CT-1 | K, L | 5 V.A | |
| 7.5 TON | 4.2KW x 8P | 110% | 1 SEC | 1 SEC | 13.3 A | 14.6 A | CT-1 | K, L | 5 V.A | |
| | 5.5KW x 6P | 110% | 1 SEC | 1 SEC | 19.9 A | 21.9 A | CT-1 | K, L | 5 V.A | |

NOTE

1. 상기 TABLE의 수치는 권고 SETTING 수치이며 MOTOR의 특성 및 현장 조건에 따라 변경 가능함.

192.168.11.51 / 2021-02-05 15:49:22

불법복제 및 배포금지

# LOAD LIMITER 권고 SETTING치

* POWER SOURCE : AC 3¢ 440V 60Hz

극동호이스트㈜

| HOIST | MOTOR 용량 | LOAD LIMITER 권고 SETTING치 | | | LOAD CURRENT | | C.T MODEL | 연결단자 NO | C.T 용량 | REMARK |
|---|---|---|---|---|---|---|---|---|---|---|
| | | LOAD CURRENT | ADJ START TIME | SHOCK TIME | 100% | 110% | | | | |
| 0.5 TON | 1.2KW x 8P | 110% | 1 SEC | 1 SEC | 4.0 A | 4.4 A | CT-1 | K, L | 5 V.A | |
| | 1.5KW x 6P | 110% | 1 SEC | 1 SEC | 3.8 A | 4.2 A | CT-1 | K, L | 5 V.A | |
| | 2.4KW x 4P | 110% | 1 SEC | 1 SEC | 5.0 A | 5.5 A | CT-1 | K, L | 5 V.A | |
| 1 TON | 1.2KW x 8P | 110% | 1 SEC | 1 SEC | 4.0 A | 4.4 A | CT-1 | K, L | 5 V.A | |
| | 2.4KW x 4P | 110% | 1 SEC | 1 SEC | 5.0 A | 5.5 A | CT-1 | K, L | 5 V.A | |
| 2 TON | 1.8KW x 8P | 110% | 1 SEC | 1 SEC | 5.5 A | 6.1 A | CT-1 | K, L | 5 V.A | |
| | 2.5KW x 6P | 110% | 1 SEC | 1 SEC | 5.8 A | 6.4 A | CT-1 | K, L | 5 V.A | |
| | 3.7KW x 4P | 110% | 1 SEC | 1 SEC | 8.0 A | 8.8 A | CT-1 | K, L | 5 V.A | |
| 2.8 TON | 2.5KW x 8P | 110% | 1 SEC | 1 SEC | 8.9 A | 9.8 A | CT-1 | K, L | 5 V.A | |
| | 5.0KW x 4P | 110% | 1 SEC | 1 SEC | 10.5 A | 11.6 A | CT-1 | K, L | 5 V.A | |
| 3 TON | 2.8KW x 8P | 110% | 1 SEC | 1 SEC | 8.9 A | 9.8 A | CT-1 | K, L | 5 V.A | |
| | 5.5KW x 4P | 110% | 1 SEC | 1 SEC | 10.5 A | 11.6 A | CT-1 | K, L | 5 V.A | |
| 5 TON | 4.2KW x 8P | 110% | 1 SEC | 1 SEC | 11.5 A | 12.7 A | CT-1 | K, L | 5 V.A | |
| | 5.5KW x 6P | 110% | 1 SEC | 1 SEC | 14.1 A | 15.5 A | CT-1 | K, L | 5 V.A | |
| 7.5 TON | 4.2KW x 8P | 110% | 1 SEC | 1 SEC | 11.5 A | 12.7 A | CT-1 | K, L | 5 V.A | |
| | 5.5KW x 6P | 110% | 1 SEC | 1 SEC | 14.1 A | 15.5 A | CT-1 | K, L | 5 V.A | |

NOTE

1. 상기 TABLE의 수치는 권고 SETTING 수치이며 MOTOR의 특성 및 현장 조건에 따라 변경 가능함.

불법복제 및 배포금지

192.168.11.51 / 2021-02-05 15:49:22

# LOAD LIMITER 권고 SETTING치

* POWER SOURCE : AC 3¢ 460V 60Hz

극동호이스트(주)

| HOIST | MOTOR 용량 | LOAD LIMITER 권고 SETTING치 | | | LOAD CURRENT | | C.T MODEL | 연결단자 NO | C.T 용량 | REMARK |
|---|---|---|---|---|---|---|---|---|---|---|
| | | LOAD CURRENT | ADJ START TIME | SHOCK TIME | 100% | 110% | | | | |
| 0.5 TON | 1.2KW x 8P | 110% | 1 SEC | 1 SEC | 3.8 A | 4.2 A | CT-1 | K, L | 5 V.A | |
| | 1.5KW x 6P | 110% | 1 SEC | 1 SEC | 3.6 A | 4.0 A | CT-1 | K, L | 5 V.A | |
| | 2.4KW x 4P | 110% | 1 SEC | 1 SEC | 4.8 A | 5.3 A | CT-1 | K, L | 5 V.A | |
| 1 TON | 1.2KW x 8P | 110% | 1 SEC | 1 SEC | 3.8 A | 4.2 A | CT-1 | K, L | 5 V.A | |
| | 2.4KW x 4P | 110% | 1 SEC | 1 SEC | 4.8 A | 5.3 A | CT-1 | K, L | 5 V.A | |
| 2 TON | 1.8KW x 8P | 110% | 1 SEC | 1 SEC | 5.3 A | 5.8 A | CT-1 | K, L | 5 V.A | |
| | 2.5KW x 6P | 110% | 1 SEC | 1 SEC | 5.5 A | 6.1 A | CT-1 | K, L | 5 V.A | |
| | 3.7KW x 4P | 110% | 1 SEC | 1 SEC | 7.7 A | 8.5 A | CT-1 | K, L | 5 V.A | |
| 2.8T | 2.5KW x 8P | 110% | 1 SEC | 1 SEC | 7.7 A | 8.5 A | CT-1 | K, L | 5 V.A | |
| | 5.0KW x 4P | 110% | 1 SEC | 1 SEC | 10.0 A | 11.0 A | CT-1 | K, L | 5 V.A | |
| 3TON | 2.8KW x 8P | 110% | 1 SEC | 1 SEC | 7.7 A | 8.5 A | CT-1 | K, L | 5 V.A | |
| | 5.5KW x 4P | 110% | 1 SEC | 1 SEC | 10.0 A | 11.0 A | CT-1 | K, L | 5 V.A | |
| 5 TON | 4.2KW x 8P | 110% | 1 SEC | 1 SEC | 11.0 A | 12.1 A | CT-1 | K, L | 5 V.A | |
| | 5.5KW x 6P | 110% | 1 SEC | 1 SEC | 13.5 A | 14.9 A | CT-1 | K, L | 5 V.A | |
| 7.5 TON | 4.2KW x 8P | 110% | 1 SEC | 1 SEC | 11.0 A | 12.1 A | CT-1 | K, L | 5 V.A | |
| | 5.5KW x 6P | 110% | 1 SEC | 1 SEC | 13.5 A | 14.9 A | CT-1 | K, L | 5 V.A | |

NOTE

1. 상기 TABLE의 수치는 권고 SETTING 수치이며 MOTOR의 특성 및 현장 조건에 따라 변경 가능함.

192.168.11.51 / 2021-02-05 15:49:22

불법복제 및 배포금지

# LOAD LIMITER 권고 SETTING치

* POWER SOURCE : AC 3¢ 480V 60Hz

극동호이스트(주)

| HOIST | MOTOR 용량 | LOAD LIMITER 권고 SETTING치 | | | LOAD CURRENT | | C.T MODEL | 연결단자 NO | C.T 용량 | REMARK |
|---|---|---|---|---|---|---|---|---|---|---|
| | | LOAD CURRENT | ADJ START TIME | SHOCK TIME | 100% | 110% | | | | |
| 0.5 TON | 1.2KW x 8P | 110% | 1 SEC | 1 SEC | 3.6 A | 4.0 A | CT-1 | K, L | 5 V.A | |
| | 1.5KW x 6P | 110% | 1 SEC | 1 SEC | 3.5 A | 3.9 A | CT-1 | K, L | 5 V.A | |
| | 2.4KW x 4P | 110% | 1 SEC | 1 SEC | 4.6 A | 5.1 A | CT-1 | K, L | 5 V.A | |
| 1 TON | 1.2KW x 8P | 110% | 1 SEC | 1 SEC | 3.6 A | 4.0 A | CT-1 | K, L | 5 V.A | |
| | 2.4KW x 4P | 110% | 1 SEC | 1 SEC | 4.6 A | 5.1 A | CT-1 | K, L | 5 V.A | |
| 2 TON | 1.8KW x 8P | 110% | 1 SEC | 1 SEC | 5.1 A | 5.6 A | CT-1 | K, L | 5 V.A | |
| | 2.5KW x 6P | 110% | 1 SEC | 1 SEC | 5.3 A | 5.8 A | CT-1 | K, L | 5 V.A | |
| | 3.7KW x 4P | 110% | 1 SEC | 1 SEC | 7.3 A | 8.0 A | CT-1 | K, L | 5 V.A | |
| 2.8 TON | 2.5KW x 8P | 110% | 1 SEC | 1 SEC | 7.3 A | 8.0 A | CT-1 | K, L | 5 V.A | |
| | 5.0KW x 4P | 110% | 1 SEC | 1 SEC | 9.6 A | 10.6 A | CT-1 | K, L | 5 V.A | |
| 3 TON | 2.8KW x 8P | 110% | 1 SEC | 1 SEC | 7.3 A | 8.0 A | CT-1 | K, L | 5 V.A | |
| | 5.5KW x 4P | 110% | 1 SEC | 1 SEC | 9.6 A | 10.6 A | CT-1 | K, L | 5 V.A | |
| 5 TON | 4.2KW x 8P | 110% | 1 SEC | 1 SEC | 10.5 A | 11.6 A | CT-1 | K, L | 5 V.A | |
| | 5.5KW x 6P | 110% | 1 SEC | 1 SEC | 12.9 A | 14.2 A | CT-1 | K, L | 5 V.A | |
| 7.5 TON | 4.2KW x 8P | 110% | 1 SEC | 1 SEC | 10.5 A | 11.6 A | CT-1 | K, L | 5 V.A | |
| | 5.5KW x 6P | 110% | 1 SEC | 1 SEC | 12.9 A | 14.2 A | CT-1 | K, L | 5 V.A | |

NOTE

1. 상기 TABLE의 수치는 권고 SETTING 수치이며 MOTOR의 특성 및 현장 조건에 따라 변경 가능함.

192.168.11.51 / 2021-02-05 15:49:22

불법복제 및 배포금지

불법복제 및 배포금지

# THREE PHASE INDUCTION MOTOR DATA SHEET

SCHEDULE OF TECHNICAL DATA

| | |
|---|---|
| 1. SERVICE | HOISTING |
| 2. MANUFACTURE | 극동 호이스트(주) |
| 3. FRAME NUMBER | 132 M |
| 4. RATED POWER | 5.5 KW x 6 P |
| 5. RATED VOLTAGE AND FREQUENCY | 220 V 60 Hz |
| 6. MOTOR TYPE | SQUIRREL CAGE ROTOR TYPE |
| 7. SERVICE FACTOR AND RATTING | 1 . 0 , 30 MIN |
| 8. LOCATION AND INSULATION CLASS | INDOOR, OUTDOOR, B CLASS |
| 9. DESIGN TEMPERATURE RISE(BY RESISTANCE) | 80 ℃ |
| 10. FULL LOAD SPEED | 1140 RPM |
| 11. FULL LOAD CURRENT | 28.2 A |
| 12. LOCKED ROTOR CURRENT | 155.1 A |
| 13. MINIMUM STARTING VOLTAGE | 200 V |
| 14. EFFICIENCY AT 100% RATED LOAD | 77.0 % |
| 15. POWER FACTOR AT 100% RATED LOAD | 66.4 % |
| 16. FULL LOAD TORQUE | 11.59 KG.M |
| 17. SITE ALTITUDE(UNDER) | 1000 M |
| 18. ENCLOSURE & COOLING METHOD | T E N V |
| 19. TYPE OF BEARING | PL : 6307zz OPL : 6207zz |
| 20. MOUNTING | H O R I Z O N T A L |
| 21. MAXIMUM AMBIENT TEMPERATURE | 40 ℃ |
| 22. BEARING LUBRICATION | G R E A S E |
| 23. STARTING METHOD | F U L L V O L T A G E |

192.168.11.51 / 2021-02-05 15:49:22

불법복제 및 배포금지

# THREE PHASE INDUCTION MOTOR DATA SHEET

SCHEDULE OF TECHNICAL DATA

| | |
|---|---|
| 1. SERVICE | HOISTING |
| 2. MANUFACTURE | 극동 호이스트(주) |
| 3. FRAME NUMBER | 132 M |
| 4. RATED POWER | 5.5 KW x 6 P |
| 5. RATED VOLTAGE AND FREQUENCY | 380 V 60 Hz |
| 6. MOTOR TYPE | SQUIRREL CAGE ROTOR TYPE |
| 7. SERVICE FACTOR AND RATTING | 1 . 0 , 30 MIN |
| 8. LOCATION AND INSULATION CLASS | INDOOR, OUTDOOR, B CLASS |
| 9. DESIGN TEMPERATURE RISE(BY RESISTANCE) | 80 ℃ |
| 10. FULL LOAD SPEED | 1140 RPM |
| 11. FULL LOAD CURRENT | 16.3 A |
| 12. LOCKED ROTOR CURRENT | 89.8 A |
| 13. MINIMUM STARTING VOLTAGE | 345 V |
| 14. EFFICIENCY AT 100% RATED LOAD | 77.0 % |
| 15. POWER FACTOR AT 100% RATED LOAD | 66.4 % |
| 16. FULL LOAD TORQUE | 11.59 KG.M |
| 17. SITE ALTITUDE(UNDER) | 1000 M |
| 18. ENCLOSURE & COOLING METHOD | T E N V |
| 19. TYPE OF BEARING | PL : 6307zz OPL : 6207zz |
| 20. MOUNTING | H O R I Z O N T A L |
| 21. MAXIMUM AMBIENT TEMPERATURE | 40 ℃ |
| 22. BEARING LUBRICATION | G R E A S E |
| 23. STARTING METHOD | F U L L V O L T A G E |

192.168.11.51 / 2021-02-05 15:49:22

불법복제 및 배포금지

# THREE PHASE INDUCTION MOTOR DATA SHEET

SCHEDULE OF TECHNICAL DATA

| | |
|---|---|
| 1. SERVICE | HOISTING |
| 2. MANUFACTURE | 극동 호이스트(주) |
| 3. FRAME NUMBER | 132 M |
| 4. RATED POWER | 5.5 KW x 6 P |
| 5. RATED VOLTAGE AND FREQUENCY | 440 V 60 Hz |
| 6. MOTOR TYPE | SQUIRREL CAGE ROTOR TYPE |
| 7. SERVICE FACTOR AND RATTING | 1 . 0 , 30 MIN |
| 8. LOCATION AND INSULATION CLASS | INDOOR, OUTDOOR, B CLASS |
| 9. DESIGN TEMPERATURE RISE(BY RESISTANCE) | 80 ℃ |
| 10. FULL LOAD SPEED | 1140 RPM |
| 11. FULL LOAD CURRENT | 14.1 A |
| 12. LOCKED ROTOR CURRENT | 77.6 A |
| 13. MINIMUM STARTING VOLTAGE | 400 V |
| 14. EFFICIENCY AT 100% RATED LOAD | 77.0 % |
| 15. POWER FACTOR AT 100% RATED LOAD | 66.4 % |
| 16. FULL LOAD TORQUE | 11.59 KG.M |
| 17. SITE ALTITUDE(UNDER) | 1000 M |
| 18. ENCLOSURE & COOLING METHOD | T E N V |
| 19. TYPE OF BEARING | PL : 6307zz OPL : 6207zz |
| 20. MOUNTING | H O R I Z O N T A L |
| 21. MAXIMUM AMBIENT TEMPERATURE | 40 ℃ |
| 22. BEARING LUBRICATION | G R E A S E |
| 23. STARTING METHOD | F U L L V O L T A G E |

192.168.11.51 / 2021-02-05 15:49:22

불법복제 및 배포금지

# THREE PHASE INDUCTION MOTOR DATA SHEET

SCHEDULE OF TECHNICAL DATA

| | |
|---|---|
| 1. SERVICE | HOISTING |
| 2. MANUFACTURE | 극동 호이스트(주) |
| 3. FRAME NUMBER | 132 M |
| 4. RATED POWER | 5.5 KW x 6 P |
| 5. RATED VOLTAGE AND FREQUENCY | 460 V 60 Hz |
| 6. MOTOR TYPE | SQUIRREL CAGE ROTOR TYPE |
| 7. SERVICE FACTOR AND RATTING | 1 . 0 , 30 MIN |
| 8. LOCATION AND INSULATION CLASS | INDOOR, OUTDOOR, B CLASS |
| 9. DESIGN TEMPERATURE RISE(BY RESISTANCE) | 80 ℃ |
| 10. FULL LOAD SPEED | 1140 RPM |
| 11. FULL LOAD CURRENT | 13.5 A |
| 12. LOCKED ROTOR CURRENT | 74.3 A |
| 13. MINIMUM STARTING VOLTAGE | 418 V |
| 14. EFFICIENCY AT 100% RATED LOAD | 77.0 % |
| 15. POWER FACTOR AT 100% RATED LOAD | 66.4 % |
| 16. FULL LOAD TORQUE | 11.59 KG.M |
| 17. SITE ALTITUDE(UNDER) | 1000 M |
| 18. ENCLOSURE & COOLING METHOD | T E N V |
| 19. TYPE OF BEARING | PL : 6307zz OPL : 6207zz |
| 20. MOUNTING | H O R I Z O N T A L |
| 21. MAXIMUM AMBIENT TEMPERATURE | 40 ℃ |
| 22. BEARING LUBRICATION | G R E A S E |
| 23. STARTING METHOD | F U L L V O L T A G E |

192.168.11.51 / 2021-02-05 15:49:22

불법복제 및 배포금지

# THREE PHASE INDUCTION MOTOR DATA SHEET

SCHEDULE OF TECHNICAL DATA

| | |
|---|---|
| 1. SERVICE | HOISTING |
| 2. MANUFACTURE | 극동 호이스트(주) |
| 3. FRAME NUMBER | 132 M |
| 4. RATED POWER | 5.5 KW x 6 P |
| 5. RATED VOLTAGE AND FREQUENCY | 480 V 60 Hz |
| 6. MOTOR TYPE | SQUIRREL CAGE ROTOR TYPE |
| 7. SERVICE FACTOR AND RATTING | 1 . 0 , 30 MIN |
| 8. LOCATION AND INSULATION CLASS | INDOOR, OUTDOOR, B CLASS |
| 9. DESIGN TEMPERATURE RISE(BY RESISTANCE) | 80 ℃ |
| 10. FULL LOAD SPEED | 1140 RPM |
| 11. FULL LOAD CURRENT | 12.9 A |
| 12. LOCKED ROTOR CURRENT | 71.2 A |
| 13. MINIMUM STARTING VOLTAGE | 436 V |
| 14. EFFICIENCY AT 100% RATED LOAD | 77.0 % |
| 15. POWER FACTOR AT 100% RATED LOAD | 66.4 % |
| 16. FULL LOAD TORQUE | 11.59 KG.M |
| 17. SITE ALTITUDE(UNDER) | 1000 M |
| 18. ENCLOSURE & COOLING METHOD | T E N V |
| 19. TYPE OF BEARING | PL : 6307zz OPL : 6207zz |
| 20. MOUNTING | H O R I Z O N T A L |
| 21. MAXIMUM AMBIENT TEMPERATURE | 40 ℃ |
| 22. BEARING LUBRICATION | G R E A S E |
| 23. STARTING METHOD | F U L L V O L T A G E |

192.168.11.51 / 2021-02-05 15:49:22

불법복제 및 배포금지

# THREE PHASE INDUCTION MOTOR DATA SHEET

SCHEDULE OF TECHNICAL DATA

| | |
|---|---|
| 1. SERVICE | HOISTING |
| 2. MANUFACTURE | 극동 호이스트(주) |
| 3. FRAME NUMBER | 132 M |
| 4. RATED POWER | 4.2 KW x 8 P |
| 5. RATED VOLTAGE AND FREQUENCY | 220 V 60 Hz |
| 6. MOTOR TYPE | SQUIRREL CAGE ROTOR TYPE |
| 7. SERVICE FACTOR AND RATTING | 1 . 0 , 30 MIN |
| 8. LOCATION AND INSULATION CLASS | INDOOR, OUTDOOR, B CLASS |
| 9. DESIGN TEMPERATURE RISE(BY RESISTANCE) | 80 ℃ |
| 10. FULL LOAD SPEED | 864 RPM |
| 11. FULL LOAD CURRENT | 23.0 A |
| 12. LOCKED ROTOR CURRENT | 136.2 A |
| 13. MINIMUM STARTING VOLTAGE | 200 V |
| 14. EFFICIENCY AT 100% RATED LOAD | 77.5 % |
| 15. POWER FACTOR AT 100% RATED LOAD | 60.0 % |
| 16. FULL ROTOR TORQUE | 14.93 KG.M |
| 17. SITE ALTITUDE(UNDER) | 1000 M |
| 18. ENCLOSURE & COOLING METHOD | T E N V |
| 19. TYPE OF BEARING | PL : 6307zz OPL : 6207zz |
| 20. MOUNTING | H O R I Z O N T A L |
| 21. MAXIMUM AMBIENT TEMPERATURE | 40 ℃ |
| 22. BEARING LUBRICATION | G R E A S E |
| 23. STARTING METHOD | F U L L V O L T A G E |

192.168.11.51 / 2021-02-05 15:49:22

불법복제 및 배포금지

# THREE PHASE INDUCTION MOTOR DATA SHEET

SCHEDULE OF TECHNICAL DATA

| | |
|---|---|
| 1. SERVICE | HOISTING |
| 2. MANUFACTURE | 극동 호이스트(주) |
| 3. FRAME NUMBER | 132 M |
| 4. RATED POWER | 4.2 KW x 8 P |
| 5. RATED VOLTAGE AND FREQUENCY | 380 V 60 Hz |
| 6. MOTOR TYPE | SQUIRREL CAGE ROTOR TYPE |
| 7. SERVICE FACTOR AND RATTING | 1 . 0 , 30 MIN |
| 8. LOCATION AND INSULATION CLASS | INDOOR, OUTDOOR, B CLASS |
| 9. DESIGN TEMPERATURE RISE(BY RESISTANCE) | 80 ℃ |
| 10. FULL LOAD SPEED | 864 RPM |
| 11. FULL LOAD CURRENT | 13.3 A |
| 12. LOCKED ROTOR CURRENT | 78.8 A |
| 13. MINIMUM STARTING VOLTAGE | 345 V |
| 14. EFFICIENCY AT 100% RATED LOAD | 77.5 % |
| 15. POWER FACTOR AT 100% RATED LOAD | 60.0 % |
| 16. FULL ROTOR TORQUE | 14.93 KG.M |
| 17. SITE ALTITUDE(UNDER) | 1000 M |
| 18. ENCLOSURE & COOLING METHOD | T E N V |
| 19. TYPE OF BEARING | PL : 6307zz OPL : 6207zz |
| 20. MOUNTING | H O R I Z O N T A L |
| 21. MAXIMUM AMBIENT TEMPERATURE | 40 ℃ |
| 22. BEARING LUBRICATION | G R E A S E |
| 23. STARTING METHOD | F U L L V O L T A G E |

192.168.11.51 / 2021-02-05 15:49:22

불법복제 및 배포금지

# THREE PHASE INDUCTION MOTOR DATA SHEET

SCHEDULE OF TECHNICAL DATA

| | |
|---|---|
| 1. SERVICE | HOISTING |
| 2. MANUFACTURE | 극동 호이스트(주) |
| 3. FRAME NUMBER | 132 M |
| 4. RATED POWER | 4.2 KW x 8 P |
| 5. RATED VOLTAGE AND FREQUENCY | 440 V 60 Hz |
| 6. MOTOR TYPE | SQUIRREL CAGE ROTOR TYPE |
| 7. SERVICE FACTOR AND RATTING | 1 . 0 , 30 MIN |
| 8. LOCATION AND INSULATION CLASS | INDOOR, OUTDOOR, B CLASS |
| 9. DESIGN TEMPERATURE RISE(BY RESISTANCE) | 80 ℃ |
| 10. FULL LOAD SPEED | 864 RPM |
| 11. FULL LOAD CURRENT | 11.5 A |
| 12. LOCKED ROTOR CURRENT | 68.1 A |
| 13. MINIMUM STARTING VOLTAGE | 400 V |
| 14. EFFICIENCY AT 100% RATED LOAD | 77.5 % |
| 15. POWER FACTOR AT 100% RATED LOAD | 60.0 % |
| 16. FULL ROTOR TORQUE | 14.93 KG.M |
| 17. SITE ALTITUDE(UNDER) | 1000 M |
| 18. ENCLOSURE & COOLING METHOD | T E N V |
| 19. TYPE OF BEARING | PL : 6307zz OPL : 6207zz |
| 20. MOUNTING | H O R I Z O N T A L |
| 21. MAXIMUM AMBIENT TEMPERATURE | 40 ℃ |
| 22. BEARING LUBRICATION | G R E A S E |
| 23. STARTING METHOD | F U L L V O L T A G E |

192.168.11.51 / 2021-02-05 15:49:22

불법복제 및 배포금지

# THREE PHASE INDUCTION MOTOR DATA SHEET

SCHEDULE OF TECHNICAL DATA

| | |
|---|---|
| 1. SERVICE | HOISTING |
| 2. MANUFACTURE | 극동 호이스트(주) |
| 3. FRAME NUMBER | 132 M |
| 4. RATED POWER | 4.2 KW x 8 P |
| 5. RATED VOLTAGE AND FREQUENCY | 460 V 60 Hz |
| 6. MOTOR TYPE | SQUIRREL CAGE ROTOR TYPE |
| 7. SERVICE FACTOR AND RATTING | 1 . 0 , 30 MIN |
| 8. LOCATION AND INSULATION CLASS | INDOOR, OUTDOOR, B CLASS |
| 9. DESIGN TEMPERATURE RISE(BY RESISTANCE) | 80 ℃ |
| 10. FULL LOAD SPEED | 864 RPM |
| 11. FULL LOAD CURRENT | 11.0 A |
| 12. LOCKED ROTOR CURRENT | 65.1 A |
| 13. MINIMUM STARTING VOLTAGE | 418 V |
| 14. EFFICIENCY AT 100% RATED LOAD | 77.5 % |
| 15. POWER FACTOR AT 100% RATED LOAD | 60.0 % |
| 16. FULL ROTOR TORQUE | 14.93 KG.M |
| 17. SITE ALTITUDE(UNDER) | 1000 M |
| 18. ENCLOSURE & COOLING METHOD | T E N V |
| 19. TYPE OF BEARING | PL : 6307zz OPL : 6207zz |
| 20. MOUNTING | H O R I Z O N T A L |
| 21. MAXIMUM AMBIENT TEMPERATURE | 40 ℃ |
| 22. BEARING LUBRICATION | G R E A S E |
| 23. STARTING METHOD | F U L L V O L T A G E |

192.168.11.51 / 2021-02-05 15:49:22

불법복제 및 배포금지

# THREE PHASE INDUCTION MOTOR DATA SHEET

SCHEDULE OF TECHNICAL DATA

| | |
|---|---|
| 1. SERVICE | HOISTING |
| 2. MANUFACTURE | 극동 호이스트(주) |
| 3. FRAME NUMBER | 132 M |
| 4. RATED POWER | 4.2 KW x 8 P |
| 5. RATED VOLTAGE AND FREQUENCY | 480 V 60 Hz |
| 6. MOTOR TYPE | SQUIRREL CAGE ROTOR TYPE |
| 7. SERVICE FACTOR AND RATTING | 1 . 0 , 30 MIN |
| 8. LOCATION AND INSULATION CLASS | INDOOR, OUTDOOR, B CLASS |
| 9. DESIGN TEMPERATURE RISE(BY RESISTANCE) | 80 ℃ |
| 10. FULL LOAD SPEED | 864 RPM |
| 11. FULL LOAD CURRENT | 10.5 A |
| 12. LOCKED ROTOR CURRENT | 62.4 A |
| 13. MINIMUM STARTING VOLTAGE | 436 V |
| 14. EFFICIENCY AT 100% RATED LOAD | 77.5 % |
| 15. POWER FACTOR AT 100% RATED LOAD | 60.0 % |
| 16. FULL ROTOR TORQUE | 14.93 KG.M |
| 17. SITE ALTITUDE(UNDER) | 1000 M |
| 18. ENCLOSURE & COOLING METHOD | T E N V |
| 19. TYPE OF BEARING | PL : 6307zz OPL : 6207zz |
| 20. MOUNTING | H O R I Z O N T A L |
| 21. MAXIMUM AMBIENT TEMPERATURE | 40 ℃ |
| 22. BEARING LUBRICATION | G R E A S E |
| 23. STARTING METHOD | F U L L V O L T A G E |

192.168.11.51 / 2021-02-05 15:49:22

불법복제 및 배포금지

# THREE PHASE INDUCTION MOTOR DATA SHEET

SCHEDULE OF TECHNICAL DATA

| | |
|---|---|
| 1. SERVICE | TRAVERSING |
| 2. MANUFACTURE | 극동 호이스트 (주) |
| 3. FRAME NUMBER | 90 S |
| 4. RATED POWER | 0.75 KW x 4 P |
| 5. RATED VOLTAGE AND FREQUENCY | 220 V 60 Hz |
| 6. MOTOR TYPE | SQUIRREL CAGE ROTOR TYPE |
| 7. SERVICE FACTOR AND RATTING | 1 . 0 , 30 MIN |
| 8. LOCATION AND INSULATION CLASS | INDOOR, OUTDOOR, B CLASS |
| 9. DESIGN TEMPERATURE RISE(BY RESISTANCE) | 80 ℃ |
| 10. FULL LOAD SPEED | 1764 RPM |
| 11. FULL LOAD CURRENT | 4.1 A |
| 12. STARTING CURRENT AT RATED VOLTAGE | 22.1 A |
| 13. MINIMUM STARTING VOLTAGE | 200 V |
| 14. EFFICIENCY AT 100% RATED LOAD | 66.0 % |
| 15. POWER FACTOR AT 100% RATED LOAD | 73.5 % |
| 16. STARTING TORQUE | 1.02 KG.M |
| 17. SITE ALTITUDE(UNDER) | 1000 M |
| 18. ENCLOSURE & COOLING METHOD | T E N V |
| 19. TYPE OF BEARING | PL : 6205zz OPL : 6204zz |
| 20. MOUNTING | H O R I Z O N T A L |
| 21. MAXIMUM AMBIENT TEMPERATURE | 40 ℃ |
| 22. BEARING LUBRICATION | G R E A S E |
| 23. STARTING METHOD | F U L L V O L T A G E |

192.168.11.51 / 2021-02-05 15:49:22

불법복제 및 배포금지

# THREE PHASE INDUCTION MOTOR DATA SHEET

SCHEDULE OF TECHNICAL DATA

| | |
|---|---|
| 1. SERVICE | TRAVERSING |
| 2. MANUFACTURE | 극동 테크 (주) |
| 3. FRAME NUMBER | 90 S |
| 4. RATED POWER | 0.75 KW x 4 P |
| 5. RATED VOLTAGE AND FREQUENCY | 380 V 60 Hz |
| 6. MOTOR TYPE | SQUIRREL CAGE ROTOR TYPE |
| 7. SERVICE FACTOR AND RATTING | 1 . 0 , 30 MIN |
| 8. LOCATION AND INSULATION CLASS | INDOOR, OUTDOOR, B CLASS |
| 9. DESIGN TEMPERATURE RISE(BY RESISTANCE) | 80 ℃ |
| 10. FULL LOAD SPEED | 1764 RPM |
| 11. FULL LOAD CURRENT | 2.4 A |
| 12. STARTING CURRENT AT RATED VOLTAGE | 13.5 A |
| 13. MINIMUM STARTING VOLTAGE | 345 V |
| 14. EFFICIENCY AT 100% RATED LOAD | 67.0 % |
| 15. POWER FACTOR AT 100% RATED LOAD | 69.5 % |
| 16. STARTING TORQUE | 0.85 KG.M |
| 17. SITE ALTITUDE(UNDER) | 1000 M |
| 18. ENCLOSURE & COOLING METHOD | T E F C |
| 19. TYPE OF BEARING | PL : 6205zz OPL : 6204zz |
| 20. MOUNTING | H O R I Z O N T A L |
| 21. MAXIMUM AMBIENT TEMPERATURE | 40 ℃ |
| 22. BEARING LUBRICATION | G R E A S E |
| 23. STARTING METHOD | F U L L V O L T A G E |

192.168.11.51 / 2021-02-05 15:49:22

불법복제 및 배포금지

# THREE PHASE INDUCTION MOTOR DATA SHEET

SCHEDULE OF TECHNICAL DATA

| | |
|---|---|
| 1. SERVICE | TRAVERSING |
| 2. MANUFACTURE | 극동 호이스트 (주) |
| 3. FRAME NUMBER | 90 S |
| 4. RATED POWER | 0.75 KW x 4 P |
| 5. RATED VOLTAGE AND FREQUENCY | 440 V 60 Hz |
| 6. MOTOR TYPE | SQUIRREL CAGE ROTOR TYPE |
| 7. SERVICE FACTOR AND RATTING | 1 . 0 , 30 MIN |
| 8. LOCATION AND INSULATION CLASS | INDOOR, OUTDOOR, B CLASS |
| 9. DESIGN TEMPERATURE RISE(BY RESISTANCE) | 80 ℃ |
| 10. FULL LOAD SPEED | 1764 RPM |
| 11. FULL LOAD CURRENT | 2.0 A |
| 12. STARTING CURRENT AT RATED VOLTAGE | 11.1 A |
| 13. MINIMUM STARTING VOLTAGE | 400 V |
| 14. EFFICIENCY AT 100% RATED LOAD | 67.0 % |
| 15. POWER FACTOR AT 100% RATED LOAD | 73.5 % |
| 16. STARTING TORQUE | 1.02 KG.M |
| 17. SITE ALTITUDE(UNDER) | 1000 M |
| 18. ENCLOSURE & COOLING METHOD | T E N V |
| 19. TYPE OF BEARING | PL : 6205zz OPL : 6204zz |
| 20. MOUNTING | H O R I Z O N T A L |
| 21. MAXIMUM AMBIENT TEMPERATURE | 40 ℃ |
| 22. BEARING LUBRICATION | G R E A S E |
| 23. STARTING METHOD | F U L L V O L T A G E |

192.168.11.51 / 2021-02-05 15:49:22

불법복제 및 배포금지

# THREE PHASE INDUCTION MOTOR DATA SHEET

SCHEDULE OF TECHNICAL DATA

| | |
|---|---|
| 1. SERVICE | TRAVERSING |
| 2. MANUFACTURE | 극동 호이스트 (주) |
| 3. FRAME NUMBER | 90 S |
| 4. RATED POWER | 0.75 KW x 4 P |
| 5. RATED VOLTAGE AND FREQUENCY | 460 V 60 Hz |
| 6. MOTOR TYPE | SQUIRREL CAGE ROTOR TYPE |
| 7. SERVICE FACTOR AND RATTING | 1 . 0 , 30 MIN |
| 8. LOCATION AND INSULATION CLASS | INDOOR, OUTDOOR, B CLASS |
| 9. DESIGN TEMPERATURE RISE(BY RESISTANCE) | 80 ℃ |
| 10. FULL LOAD SPEED | 1764 RPM |
| 11. FULL LOAD CURRENT | 2.0 A |
| 12. STARTING CURRENT AT RATED VOLTAGE | 10.6 A |
| 13. MINIMUM STARTING VOLTAGE | 418 V |
| 14. EFFICIENCY AT 100% RATED LOAD | 66.0 % |
| 15. POWER FACTOR AT 100% RATED LOAD | 73.5 % |
| 16. STARTING TORQUE | 1.02 KG.M |
| 17. SITE ALTITUDE(UNDER) | 1000 M |
| 18. ENCLOSURE & COOLING METHOD | T E N V |
| 19. TYPE OF BEARING | PL : 6205zz OPL : 6204zz |
| 20. MOUNTING | H O R I Z O N T A L |
| 21. MAXIMUM AMBIENT TEMPERATURE | 40 ℃ |
| 22. BEARING LUBRICATION | G R E A S E |
| 23. STARTING METHOD | F U L L V O L T A G E |

192.168.11.51 / 2021-02-05 15:49:22

불법복제 및 배포금지

# THREE PHASE INDUCTION MOTOR DATA SHEET

SCHEDULE OF TECHNICAL DATA

| | |
|---|---|
| 1. SERVICE | TRAVERSING |
| 2. MANUFACTURE | 극동 호이스트 (주) |
| 3. FRAME NUMBER | 90 S |
| 4. RATED POWER | 0.75 KW x 4 P |
| 5. RATED VOLTAGE AND FREQUENCY | 480 V 60 Hz |
| 6. MOTOR TYPE | SQUIRREL CAGE ROTOR TYPE |
| 7. SERVICE FACTOR AND RATTING | 1 . 0 , 30 MIN |
| 8. LOCATION AND INSULATION CLASS | INDOOR, OUTDOOR, B CLASS |
| 9. DESIGN TEMPERATURE RISE(BY RESISTANCE) | 80 ℃ |
| 10. FULL LOAD SPEED | 1764 RPM |
| 11. FULL LOAD CURRENT | 1.9 A |
| 12. STARTING CURRENT AT RATED VOLTAGE | 10.2 A |
| 13. MINIMUM STARTING VOLTAGE | 436 V |
| 14. EFFICIENCY AT 100% RATED LOAD | 66.0 % |
| 15. POWER FACTOR AT 100% RATED LOAD | 73.5 % |
| 16. STARTING TORQUE | 1.02 KG.M |
| 17. SITE ALTITUDE(UNDER) | 1000 M |
| 18. ENCLOSURE & COOLING METHOD | T E N V |
| 19. TYPE OF BEARING | PL : 6205zz OPL : 6204zz |
| 20. MOUNTING | H O R I Z O N T A L |
| 21. MAXIMUM AMBIENT TEMPERATURE | 40 ℃ |
| 22. BEARING LUBRICATION | G R E A S E |
| 23. STARTING METHOD | F U L L V O L T A G E |

192.168.11.51 / 2021-02-05 15:49:22

불법복제 및 배포금지

# THREE PHASE INDUCTION MOTOR DATA SHEET

SCHEDULE OF TECHNICAL DATA

| | |
|---|---|
| 1. SERVICE | TRAVERSING |
| 2. MANUFACTURE | 극동 호이스트 (주) |
| 3. FRAME NUMBER | 90 S |
| 4. RATED POWER | 0.5 KW x 6 P |
| 5. RATED VOLTAGE AND FREQUENCY | 220 V 60 Hz |
| 6. MOTOR TYPE | SQUIRREL CAGE ROTOR TYPE |
| 7. SERVICE FACTOR AND RATTING | 1 . 0 , 30 MIN |
| 8. LOCATION AND INSULATION CLASS | INDOOR, OUTDOOR, B CLASS |
| 9. DESIGN TEMPERATURE RISE(BY RESISTANCE) | 80 ℃ |
| 10. FULL LOAD SPEED | 1164 RPM |
| 11. FULL LOAD CURRENT | 3.4 A |
| 12. STARTING CURRENT AT RATED VOLTAGE | 16.4 A |
| 13. MINIMUM STARTING VOLTAGE | 200 V |
| 14. EFFICIENCY AT 100% RATED LOAD | 64.0 % |
| 15. POWER FACTOR AT 100% RATED LOAD | 59.5 % |
| 16. STARTING TORQUE | 0.80 KG.M |
| 17. SITE ALTITUDE(UNDER) | 1000 M |
| 18. ENCLOSURE & COOLING METHOD | T E N V |
| 19. TYPE OF BEARING | PL : 6205zz OPL : 6204zz |
| 20. MOUNTING | H O R I Z O N T A L |
| 21. MAXIMUM AMBIENT TEMPERATURE | 40 ℃ |
| 22. BEARING LUBRICATION | G R E A S E |
| 23. STARTING METHOD | F U L L V O L T A G E |

192.168.11.51 / 2021-02-05 15:49:22

불법복제 및 배포금지

# THREE PHASE INDUCTION MOTOR DATA SHEET

SCHEDULE OF TECHNICAL DATA

| | |
|---|---|
| 1. SERVICE | TRAVERSING |
| 2. MANUFACTURE | 극동 호이스트 (주) |
| 3. FRAME NUMBER | 90 S |
| 4. RATED POWER | 0.5 KW x 6 P |
| 5. RATED VOLTAGE AND FREQUENCY | 380 V 60 Hz |
| 6. MOTOR TYPE | SQUIRREL CAGE ROTOR TYPE |
| 7. SERVICE FACTOR AND RATTING | 1 . 0 , 30 MIN |
| 8. LOCATION AND INSULATION CLASS | INDOOR, OUTDOOR, B CLASS |
| 9. DESIGN TEMPERATURE RISE(BY RESISTANCE) | 80 ℃ |
| 10. FULL LOAD SPEED | 1164 RPM |
| 11. FULL LOAD CURRENT | 2.0 A |
| 12. STARTING CURRENT AT RATED VOLTAGE | 9.5 A |
| 13. MINIMUM STARTING VOLTAGE | 345 V |
| 14. EFFICIENCY AT 100% RATED LOAD | 64.0 % |
| 15. POWER FACTOR AT 100% RATED LOAD | 59.5 % |
| 16. STARTING TORQUE | 0.80 KG.M |
| 17. SITE ALTITUDE(UNDER) | 1000 M |
| 18. ENCLOSURE & COOLING METHOD | T E N V |
| 19. TYPE OF BEARING | PL : 6205zz OPL : 6204zz |
| 20. MOUNTING | H O R I Z O N T A L |
| 21. MAXIMUM AMBIENT TEMPERATURE | 40 ℃ |
| 22. BEARING LUBRICATION | G R E A S E |
| 23. STARTING METHOD | F U L L V O L T A G E |

192.168.11.51 / 2021-02-05 15:49:22

불법복제 및 배포금지

# THREE PHASE INDUCTION MOTOR DATA SHEET

SCHEDULE OF TECHNICAL DATA

| | |
|---|---|
| 1. SERVICE | TRAVERSING |
| 2. MANUFACTURE | 극동 호이스트 (주) |
| 3. FRAME NUMBER | 90 S |
| 4. RATED POWER | 0.5 KW x 6 P |
| 5. RATED VOLTAGE AND FREQUENCY | 440 V 60 Hz |
| 6. MOTOR TYPE | SQUIRREL CAGE ROTOR TYPE |
| 7. SERVICE FACTOR AND RATTING | 1 . 0 , 30 MIN |
| 8. LOCATION AND INSULATION CLASS | INDOOR, OUTDOOR, B CLASS |
| 9. DESIGN TEMPERATURE RISE(BY RESISTANCE) | 80 ℃ |
| 10. FULL LOAD SPEED | 1164 RPM |
| 11. FULL LOAD CURRENT | 1.7 A |
| 12. STARTING CURRENT AT RATED VOLTAGE | 8.2 A |
| 13. MINIMUM STARTING VOLTAGE | 400 V |
| 14. EFFICIENCY AT 100% RATED LOAD | 64.0 % |
| 15. POWER FACTOR AT 100% RATED LOAD | 59.5 % |
| 16. STARTING TORQUE | 0.80 KG.M |
| 17. SITE ALTITUDE(UNDER) | 1000 M |
| 18. ENCLOSURE & COOLING METHOD | T E N V |
| 19. TYPE OF BEARING | PL : 6205zz OPL : 6204zz |
| 20. MOUNTING | H O R I Z O N T A L |
| 21. MAXIMUM AMBIENT TEMPERATURE | 40 ℃ |
| 22. BEARING LUBRICATION | G R E A S E |
| 23. STARTING METHOD | F U L L V O L T A G E |

192.168.11.51 / 2021-02-05 15:49:22

불법복제 및 배포금지

# THREE PHASE INDUCTION MOTOR DATA SHEET

SCHEDULE OF TECHNICAL DATA

| | |
|---|---|
| 1. SERVICE | TRAVERSING |
| 2. MANUFACTURE | 극동 호이스트 (주) |
| 3. FRAME NUMBER | 90 S |
| 4. RATED POWER | 0.5 KW x 6 P |
| 5. RATED VOLTAGE AND FREQUENCY | 460 V 60 Hz |
| 6. MOTOR TYPE | SQUIRREL CAGE ROTOR TYPE |
| 7. SERVICE FACTOR AND RATTING | 1 . 0 , 30 MIN |
| 8. LOCATION AND INSULATION CLASS | INDOOR, OUTDOOR, B CLASS |
| 9. DESIGN TEMPERATURE RISE(BY RESISTANCE) | 80 ℃ |
| 10. FULL LOAD SPEED | 1164 RPM |
| 11. FULL LOAD CURRENT | 1.7 A |
| 12. STARTING CURRENT AT RATED VOLTAGE | 7.9 A |
| 13. MINIMUM STARTING VOLTAGE | 418 V |
| 14. EFFICIENCY AT 100% RATED LOAD | 64.0 % |
| 15. POWER FACTOR AT 100% RATED LOAD | 59.5 % |
| 16. STARTING TORQUE | 0.80 KG.M |
| 17. SITE ALTITUDE(UNDER) | 1000 M |
| 18. ENCLOSURE & COOLING METHOD | T E N V |
| 19. TYPE OF BEARING | PL : 6205zz OPL : 6204zz |
| 20. MOUNTING | H O R I Z O N T A L |
| 21. MAXIMUM AMBIENT TEMPERATURE | 40 ℃ |
| 22. BEARING LUBRICATION | G R E A S E |
| 23. STARTING METHOD | F U L L V O L T A G E |

192.168.11.51 / 2021-02-05 15:49:22

불법복제 및 배포금지

# THREE PHASE INDUCTION MOTOR DATA SHEET

SCHEDULE OF TECHNICAL DATA

| | |
|---|---|
| 1. SERVICE | TRAVERSING |
| 2. MANUFACTURE | 극동 호이스트 (주) |
| 3. FRAME NUMBER | 90 S |
| 4. RATED POWER | 0.5 KW x 6 P |
| 5. RATED VOLTAGE AND FREQUENCY | 480 V 60 Hz |
| 6. MOTOR TYPE | SQUIRREL CAGE ROTOR TYPE |
| 7. SERVICE FACTOR AND RATTING | 1 . 0 , 30 MIN |
| 8. LOCATION AND INSULATION CLASS | INDOOR, OUTDOOR, B CLASS |
| 9. DESIGN TEMPERATURE RISE(BY RESISTANCE) | 80 ℃ |
| 10. FULL LOAD SPEED | 1164 RPM |
| 11. FULL LOAD CURRENT | 1.6 A |
| 12. STARTING CURRENT AT RATED VOLTAGE | 7.5 A |
| 13. MINIMUM STARTING VOLTAGE | 436 V |
| 14. EFFICIENCY AT 100% RATED LOAD | 64.0 % |
| 15. POWER FACTOR AT 100% RATED LOAD | 59.5 % |
| 16. STARTING TORQUE | 0.80 KG.M |
| 17. SITE ALTITUDE(UNDER) | 1000 M |
| 18. ENCLOSURE & COOLING METHOD | T E N V |
| 19. TYPE OF BEARING | PL : 6205zz OPL : 6204zz |
| 20. MOUNTING | H O R I Z O N T A L |
| 21. MAXIMUM AMBIENT TEMPERATURE | 40 ℃ |
| 22. BEARING LUBRICATION | G R E A S E |
| 23. STARTING METHOD | F U L L V O L T A G E |

192.168.11.51 / 2021-02-05 15:49:22

불법복제 및 배포금지

DSR WIRE CORP

ORIGINAL

SALES OFFICE : 7th floor, 145, Teheran-ro, Gangnam-gu, Seoul, Korea
TEL : 82-2-3420-3500, FAX : 82-2-3420-3600, E-mail : sales@dsrcorp.com, http://www.dsrcorp.com

# MILL TEST CERTIFICATE / CERTIFICATE OF INSPECTION

Certificate No : 201810-Do637-1
Reel/Coil No : 1 - 2
Purchaser : -

Date : 2018. 10. 10
P.O No : -
L/C No. : -
Invoice No : Do637-160

## 1. TYPE / GRADE

Construction : 6X37+FC
Diameter : 16 MM
Length : 1,000 MTRS X 2 R/L
Specification : KS D 3514

Coating : BRIGHT
Grade : 1,770
Lay : RHRL
Lubrication : A-2

## 2. ROPE TEST RESULTS

| Items | Norminal or Specified | Actual |
|---|---|---|
| Diameter | 16 MM | 16.4 MM |
| Breaking Strength | 145.0 KN | 149 KN |
| Lay Length | - MM | 107 MM |
| Preforming | Good | Good |

## 3. WIRE TEST RESULTS

| Items | Norminal or Specified | Actual |
|---|---|---|
| Diameter | 0.72 MM | 0.73 MM |
| Tensile Strength | 1,770 N/MM2 | 1,833 N/MM2 |
| Break Force | 720 N | 767 N |
| Torsion | 27 | 40 |
| Weight of Coating | - G/M2 | - G/M2 |

We hereby certify that the above results are true and correct in every detail.

## CHEMICAL ANALYSIS OF WIRE ROD

| Charge No | Chemical Composition (%) | | | | |
|---|---|---|---|---|---|
| | C | Si | Mn | P | S |
| SF 97502 | 0.71 | 0.20 | 0.47 | 0.009 | 0.007 |

Approval or Inspection Possibility

WIRE ROPE
Suncheon Factory : 15, Sandan 1-gil, Seo-myeon, Suncheon-si Jeonnanam-do, Korea
Yulchon Factory : 80-21, Yulchonsandan 1-ro, Heenyang-myeon, Suncheon-si, Jeonnanam-do, Korea

ISO, ISO(Yul) ISO(Yul) ISO(Yul) OHSAS(Yul) JIS G 3525 (KSKR 08022) JIS G 3537 (KSKR 05023) KS D 3514 (AB173호) KS D 7007 (AB174호)

ABS LLOYD'S NK KR DNV GL BV RINA CCS RS

WIRE
Suncheon 2Factory : 38, Sandan 4-gil, Seo-myeon, Suncheon-si Jeonnanam-do, Korea

ISO JIS G 3521 (KSKR 08020) JIS G 3522 (KSKR 08021) KS D 3510 (AB172호)

Quality Management Dept

Chief Inspector

192.168.11.51 / 2021-02-05 15:49:22